PDF Eraser Free

Panasonic®

Operating Instructions

Integrated Telephone System

Model No. **KX-TS4200**

4 LINE

This unit is compatible with Caller ID. To use this feature, you must subscribe to the appropriate service offered by your telephone service provider.

Please read these Operating Instructions before using the unit and save for future reference.
For assistance, visit our website:
http://www.panasonic.com/phonehelp for customers in the U.S.A. or Puerto Rico.

PDF Eraser Free

Introduction

Introduction 4
Accessory information 5
Included accessories 5
Additional/replacement accessories 5
Sales and support information 5
Important safety instructions 6
For best performance 8

Preparation

Symbols used in these operating instructions 9
Display 9
Location of controls 10
Battery installation 12
Setup 13
Connecting the handset and AC adaptor 14
Connecting the telephone line cords . 15
Connecting the units to individual two-line telephone jacks 15
Connecting 2 two-line telephone jacks 16
Connecting four single-line telephone jacks 17
If you subscribe to a DSL service. . . . 18
Connecting 2 two-line telephone jacks 18
Connecting four single-line telephone jacks 19
Setting up the line group 20
Connecting a communication device . 22
Setting the unit before use 23
Display language 23
Extension No. 23
Date and time 24
Dialing mode 24

Making/Answering Calls

Making calls 25
Answering calls 26
Turning ringer on/off 26
Ringer type 27
Turning Do Not Disturb (DND) on/off 27
Making/answering another outside call during a conversation 28
Useful features during a call. 28
Call privacy 28
HOLD button 28
Hold reminder 29
MUTE button 29
FLASH button 29
Flash time 30
Temporary tone dialing (for rotary/ pulse service users). 30

Phonebook

Phonebook 31
Adding items to the phonebook . . 31
Storing items from the phonebook into the speed dialer 32
Storing items from the redial list into the phonebook 32
Finding and calling a phonebook item 33
Editing items in the phonebook . . 33
Erasing one item in the phonebook 34
Erasing all items in the phonebook 34
Chain dial 34

Speed Dialer

Speed dialer 35
Speed dial preference 35
Adding/editing names and phone numbers 35
Storing items from the redial list into the speed dialer 36
Erasing a stored entry 37
Calling someone with the speed dialer 37

Multi-unit Operation

Intercom/Paging 38
Making an intercom call 38
Answering an intercom call 38
Paging a designated extension . . 39
Answering a single page 39
Paging all extensions 39
Answering all pages. 39
Room monitor 40
Transferring calls 40
Answering transferred calls 41
Conference calls. 41

Caller ID Service

Using Caller ID service 43
Incoming Caller ID display 43

PDF Eraser Free

KXT4200_OI.book Page 3 Friday, September 1, 2006 8:53 AM

Caller list 44
Viewing the caller list 44
Calling back from the caller list . . 44
Editing a caller's phone number before calling back 45
Area codes 45
Storing caller information into the phonebook 46
Storing caller information into the speed dialer 47
Erasing selected caller information 47
Erasing all caller information 47

Programming

Programmable settings 48
Programming the phone setup features 50
Prime line 50
Handsfree mode 50
Programming the advanced setup features 51
Line group 51
Reset all 51

Voice Mail Service

Using Voice Mail service 52
Message waiting 52

Useful Information

Headset (optional) 53
Sales and support information . . . 53
Connecting the optional headset to the unit 53
Wall mounting 54
Connecting a standard telephone . . 56
Error messages 57
Troubleshooting 57
FCC and other information 61
Specifications 63
Customer services 64
Warranty 65

Index

Index 67

PDF Eraser Free

Introduction

Thank you for purchasing a Panasonic integrated telephone.

We recommend keeping a record of the following information for future reference.

Serial No. _____ Date of purchase _____
(found on the bottom of the unit)

Name and address of dealer _____

Attach your purchase receipt here.

PDF Eraser Free

Accessory information

Included accessories

☐ AC adaptor
Order No. PQLV210Z

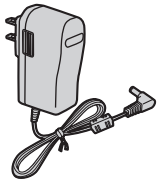

one

☐ Handset
Order No. PQJXC0401Z (Black)

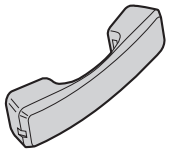

one

☐ Handset cord
Order No. PQJA212N (Gray)

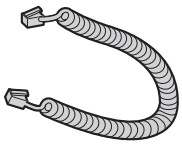

one

☐ 4-wire telephone line cord
Order No. PQJA10088Z

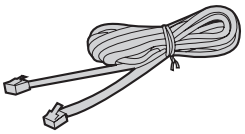

two

☐ Wall mounting adaptor
Order No. PQYL10021Z

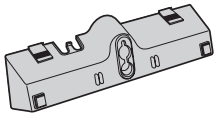

one

Additional/replacement accessories

Accessory item	Order number
Headset	KX-TCA86, KX-TCA88HA, KX-TCA91, KX-TCA92, KX-TCA93, KX-TCA94, or KX-TCA95
2-line adaptor	KX-J24
2-line splitter	KX-J42
T-adaptor	KX-J66
2-wire telephone line cord	PQJA10075Z
9 V Alkaline (6LR61) back-up battery	Use standard store bought 9 V Alkaline battery

Sales and support information

- To order additional/replacement accessories, call 1-800-332-5368.
- TTY users (hearing or speech impaired users) can call 1-866-605-1277.

PDF Eraser Free

Important safety instructions

When using the product, basic safety precautions should always be followed to reduce the risk of fire, electric shock, or personal injury.

1. Read all instructions carefully.
2. Follow all warnings and instructions marked on the product.
3. Unplug the product from power outlets before cleaning. Do not use liquid or aerosol cleaners. Use a moist cloth for cleaning.
4. Do not use the product near water, for example near a bathtub, wash bowl, kitchen sink, etc.
5. Place the product securely on a stable surface. Serious damage and/or injury may result if the product falls.
6. Do not cover slots and openings on the product. They are provided for ventilation and protection against overheating. Never place the product near radiators, or in a place where proper ventilation is not provided.
7. Use only the power source marked on the product. If you are not sure of the type of power supplied to your home, consult your dealer or local power company.
8. Do not place objects on the power cord. Install the product where no one can step or trip on the cord.
9. Do not overload power outlets and extension cords. This can result in the risk of fire or electric shock.
10. Never push any objects through slots in the product. This may result in the risk of fire or electric shock. Never spill any liquid on the product.
11. To reduce the risk of electric shock, do not disassemble the product. Take the product to an authorized service center when service is required. Opening or removing covers may expose you to dangerous voltages or other risks. Incorrect reassembly can cause electric shock when the product is subsequently used.
12. Unplug the product from power outlets and take to an authorized service center when the following conditions occur:
    A. When the power cord is damaged or frayed.
    B. If liquid has been spilled into the product.
    C. If the product has been exposed to rain or water.
    D. If the product does not work normally by following the operating instructions. Adjust only controls covered by the operating instructions. Improper adjustment may require extensive work by an authorized service center.
    E. If the product has been dropped or physically damaged.
    F. If the product exhibits a distinct change in performance.
13. During thunderstorms, avoid using telephones except cordless types. There may be a remote risk of an electric shock from lightning.
14. Do not use the product to report a gas leak, when in the vicinity of the leak.

SAVE THESE INSTRUCTIONS

CAUTION:

Installation

- Never install telephone wiring during a lightning storm.
- Never install telephone jacks in wet locations unless the jack is specifically designed for wet locations.
- Never touch uninsulated telephone wires or terminals unless the

PDF Eraser Free

telephone line has been disconnected at the network interface.
- Use caution when installing or modifying telephone lines.
- Do not touch the plug with wet hands.
- The AC adaptor is used as the main disconnect device. Ensure that the AC outlet is installed near the product and is easily accessible.

Battery

To reduce the risk of fire or injury to persons, read and follow these instructions.
- Use only the battery specified.
- Do not dispose of the battery in a fire. It may explode. Check with local waste management codes for special disposal instructions.
- Do not open or mutilate the battery. Released electrolyte is corrosive and may cause burns or injury to the eyes or skin. The electrolyte may be toxic if swallowed.
- Exercise care when handling the battery in order not to short the battery to conductive materials such as rings, bracelets, and keys. The battery and/or conductor may overheat and cause burns.
- Do not recharge the battery provided with or identified for use with the product. The battery may leak corrosive electrolyte or explode.
- Do not attempt to rejuvenate the battery provided with or identified for use with the product by heating. Sudden release of battery electrolyte may occur causing burns or irritation to the eyes or skin.
- Remove the battery from the product if the product will not be used for a long period of time (several months or more). During this time the battery could leak in the product.
- Discard the “dead” battery as soon as possible. The “dead” battery may leak in the product.
- Do not store the product, or the battery provided with or identified for use with the product, in high temperature areas. A battery that is stored in a freezer or refrigerator for the purpose of extending shelf life should be protected from condensation during storage and defrosting. A battery should be stabilized at room temperature prior to use after cold storage.

WARNING:

- To prevent the risk of fire or electrical shock, do not expose the product to rain or any type of moisture.
- Unplug the product from power outlets if it emits smoke, an abnormal smell, or makes an unusual noise. These conditions can cause fire or electric shock. Confirm that smoke has stopped emitting and contact the Panasonic Call Center at 1-800-211-PANA (1-800-211-7262).

PDF Eraser Free

For best performance

Environment

- Keep the product away from electrical noise generating devices, such as fluorescent lamps and motors.
- The product should be kept free from excessive smoke, dust, high temperature, and vibration.
- The product should not be exposed to direct sunlight.
- Do not place heavy objects on top of the product.
- When you leave the product unused for a long period of time, unplug the product from the power outlet.
- The product should be kept away from heat sources such as heaters, kitchen stoves, etc. It should not be placed in rooms where the temperature is less than 5 °C (41 °F) or greater than 40 °C (104 °F). Damp basements should also be avoided.

Routine care

- Wipe the outer surface of the product with a soft moist cloth. Do not use benzine, thinner, or any abrasive powder.

PDF Eraser Free

Symbols used in these operating instructions

Symbol	Meaning
【 】: button name **Example:** **【MENU/SET】, 【SP-PHONE】**	The words in the brackets indicate button names on the unit.
Example: "**`Ringer Type`**"	The words in quotations indicate the menu on the display.
Example: Select "**`Phone Setup`**".	Press 【▼】 or 【▲】 to select "**`Phone Setup`**".
【▼】【▲】【◀】【▶】	Press down, up, left, or right on the navigator key.

Display

Example:

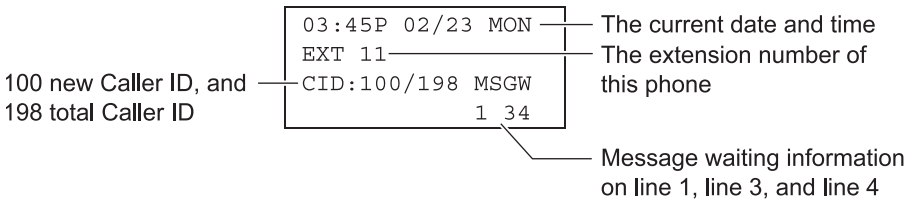

PDF Eraser Free

Location of controls

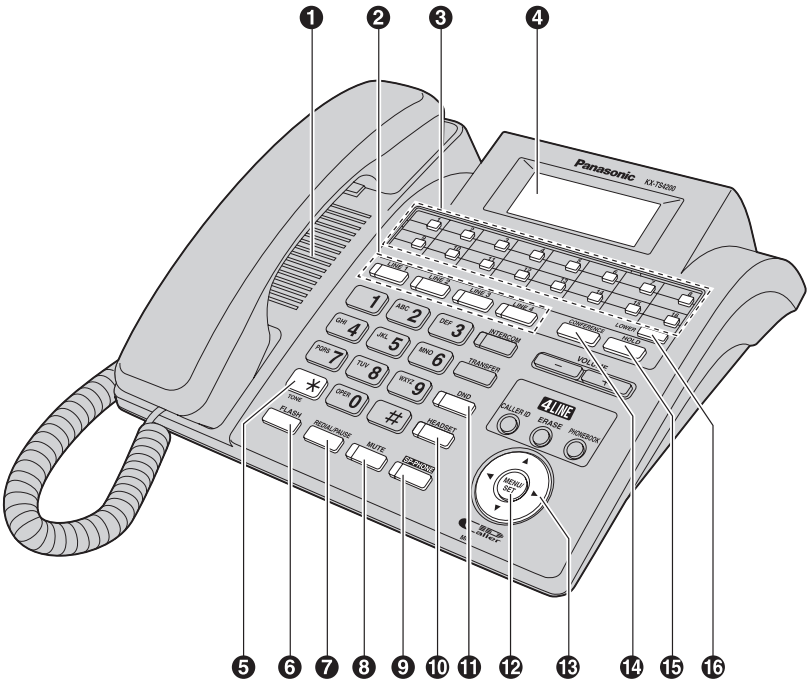

❶ Speaker
❷ Line buttons and indicators
❸ Speed dial (extension) buttons
❹ Display
❺ 【✳】(TONE)
❻ 【FLASH】
❼ 【REDIAL/PAUSE】
❽ 【MUTE】
MUTE indicator
❾ 【SP-PHONE】(Speakerphone)
SP-PHONE indicator
❿ 【HEADSET】
HEADSET indicator
⓫ 【DND】(Do Not Disturb)
DND indicator
⓬ 【MENU/SET】
⓭ Navigator key (【▼】【▲】【◀】【▶】)
⓮ 【CONFERENCE】
⓯ 【HOLD】
⓰ 【LOWER】

PDF Eraser Free

KXT4200_OI.book Page 11 Friday, September 1, 2006 8:53 AM

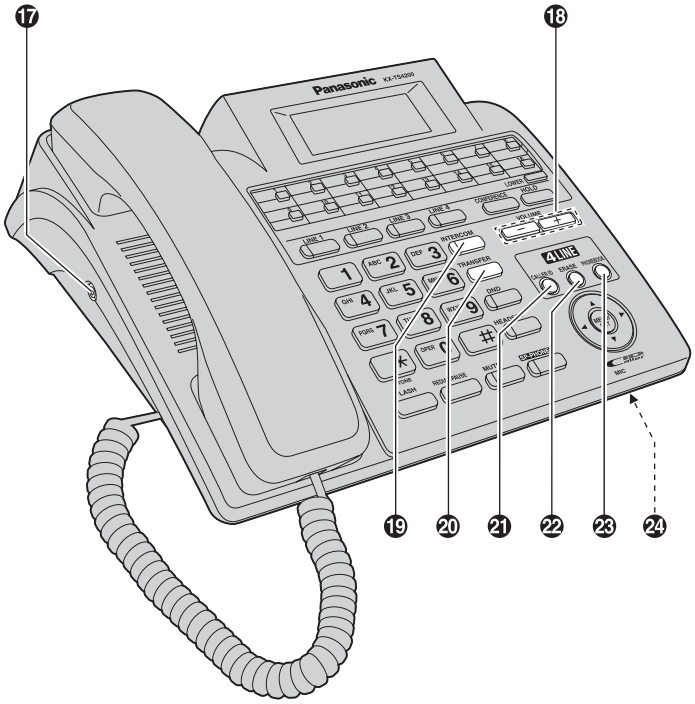

⓱ **Headset jack**
⓲ **Volume key (【－】【＋】)**
⓳ **【INTERCOM】**
INTERCOM indicator
⓴ **【TRANSFER】**
㉑ **【CALLER ID】**
㉒ **【ERASE】**
㉓ **【PHONEBOOK】**
㉔ **MIC (Microphone)**

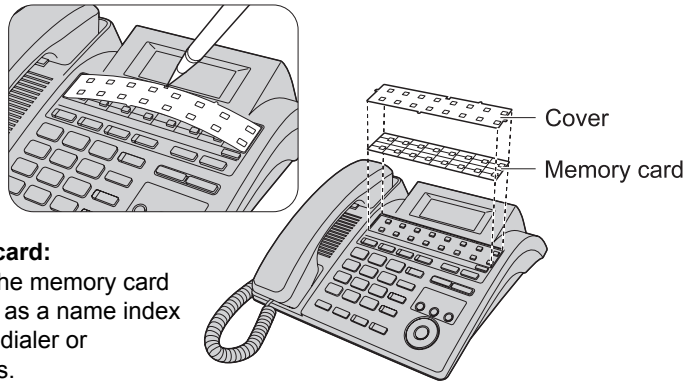

Memory card:
Remove the memory card and use it as a name index for speed dialer or extensions.

PDF Eraser Free

Battery installation

Install a 9 V Alkaline (6LR61) battery (sold separately) in the battery compartment. It works as emergency power during a power failure. The unit will work as a standard telephone, so that you can make or answer outside calls with the handset. (You cannot use the speakerphone, intercom, etc.)

1 Open the battery cover by sliding in the direction of arrow (①), and take out the battery snap (②).

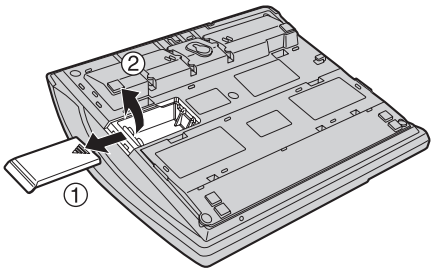

2 Match the polarity and snap the battery to the battery snap as shown.

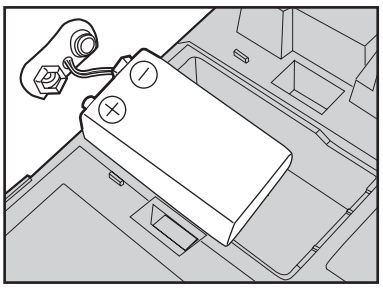

3 Place the battery into the battery compartment.

4 Dress the battery snap wire, and close the battery cover.

Note:

- Please refer to “Battery” on page 7 for correct battery usage.
- When the display shows “`LOW BATT`” with a 9 V battery in the unit, the battery needs to be changed immediately. If the battery level is too low, all LEDs might light up or flash and the unit is not guaranteed to perform as normal during a power failure. Replacing with a fresh battery will restore normal function.
- The Manganese (6F22) battery can be used but operating time when using it will be dramatically shortened.
- It is recommended that the battery is replaced annually.
- It is recommended that the battery is replaced after a power outage.
- The battery operating time may depend on usage conditions, ambient temperature, and battery quality.
- During a power failure the battery will retain the clock memory (see “Date and time” on page 24) and the redial memory (see “Making a call using the redial list” on page 25). If you do not install the battery, the data in memory will be lost during a power failure.
- When storing or disposing of the battery, please cover the positive (⊕) and negative (⊖) terminals with tape.

Battery replacement

Disconnect the telephone line cord(s) before opening the battery cover.

Note:

- You do not need to disconnect the AC adaptor, otherwise the clock memory and the redial memory will be lost.
- Please refer to “Battery” on page 7 for correct battery usage.

Battery life

The battery works as **emergency power** during a power failure.

Please remove the battery when you cut the power supply, as the battery will discharge automatically once the power is cut according to the time as follows.

Operation	Operating time (for a Panasonic Alkaline battery)
While in use (talking)	Approx. 3 hours
While not in use (standby)	Approx. 4 hours

PDF Eraser Free

Setup

This unit can be used in 3 positions.

On the desk

– Normal (without the wall mounting adaptor)

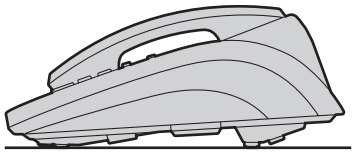

– With the wall mounting adaptor

You can attach the wall mounting adaptor to slope this unit.

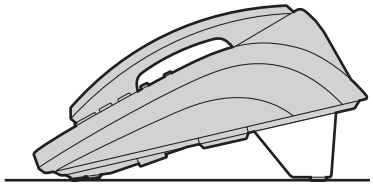

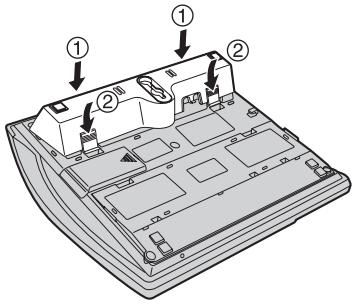

- To attach the wall mounting adaptor, push it in the direction of the arrows (① and ②) as shown.

On the wall

See “Wall mounting” on page 54 for details.

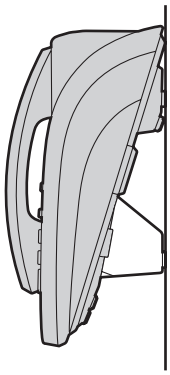

PDF Eraser Free

Connecting the handset and AC adaptor

Important:
- Use only the included Panasonic handset PQJXC0401Z.
- Use only the included Panasonic AC adaptor PQLV210Z.

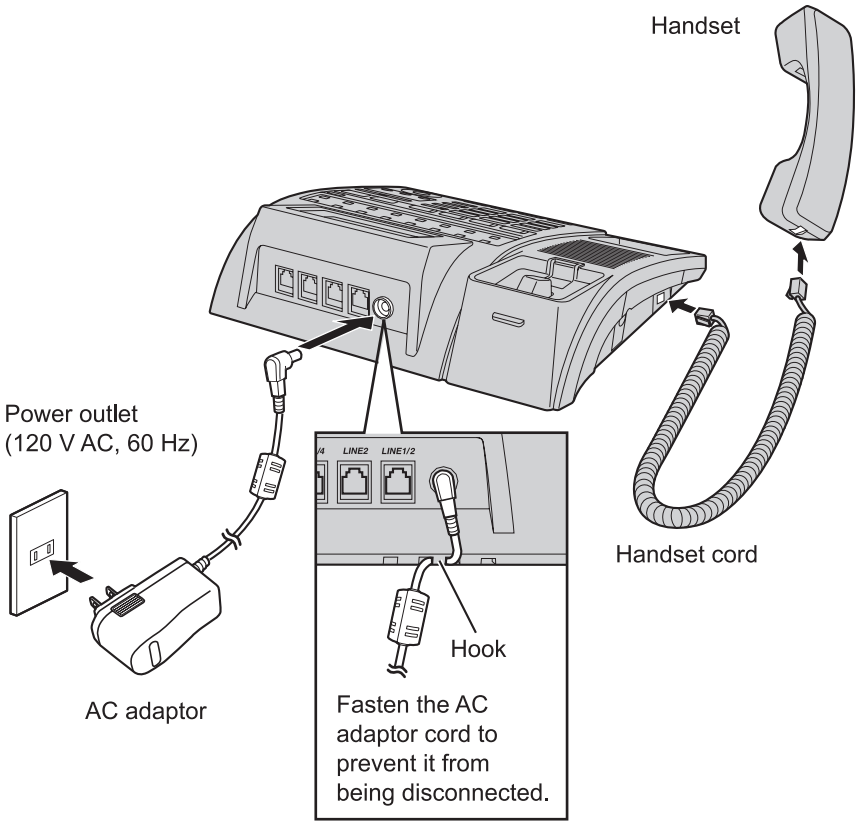

Note:
- The AC adaptor must remain connected at all times. (It is normal for the adaptor to feel warm during use.)
- The AC adaptor should be connected to a vertically oriented or floor-mounted AC outlet. Do not connect the AC adaptor to a ceiling-mounted AC outlet, as the weight of the adaptor may cause it to become disconnected.
- The unit will not work during a power failure. We recommend connecting a standard telephone to the same telephone line or to the same telephone jack using a Panasonic T-adaptor KX-J66 (see “Connecting a standard telephone” on page 56). Emergency power can be supplied to the unit by installing a 9 V Alkaline (6LR61) back-up battery (see “Additional/replacement accessories” on page 5).

PDF Eraser Free

Connecting the telephone line cords

A maximum of 16 system phones (KX-TS4100/KX-TS4200/KX-TS4300) can be connected in parallel. To use the intercom, LINE1 must be connected at all extensions, and must be the same phone number.

Connecting the units to individual two-line telephone jacks

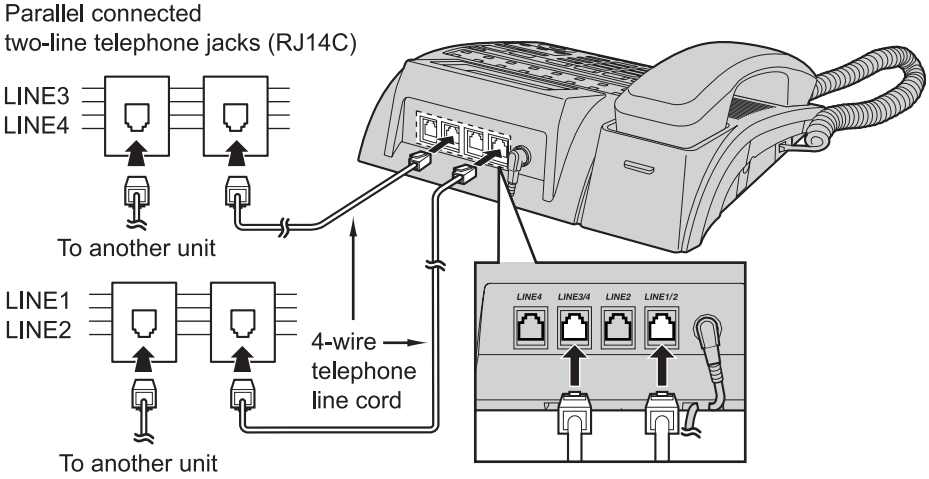

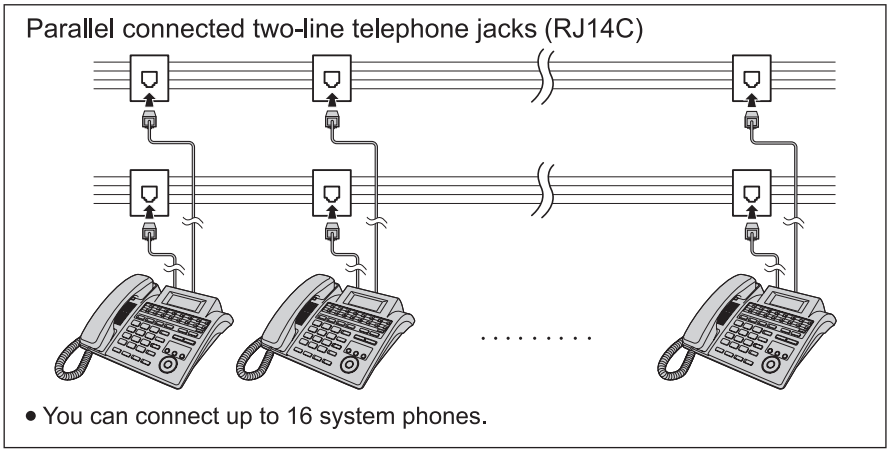

Note:

- If a non-system phone is connected to the system phone (KX-TS4100/KX-TS4200/KX-TS4300), the line indicators of this unit will not function for that telephone.

DSL Internet connection and KX-TS4100/KX-TS4200/KX-TS4300 Intercom work at similar frequencies. Please contact Panasonic at 1-800-211-PANA (1-800-211-7262) for special wiring configurations.

PDF Eraser Free

Connecting 2 two-line telephone jacks

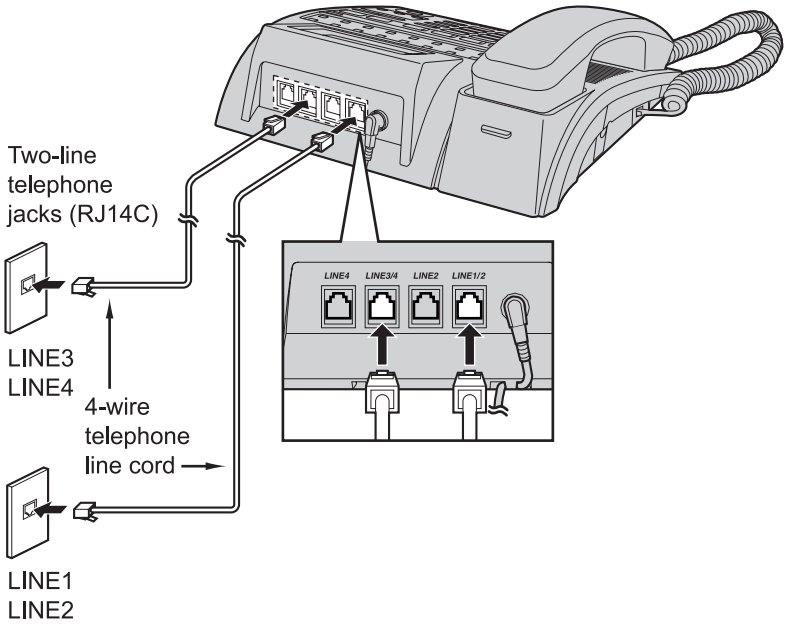

DSL Internet connection and KX-TS4100/KX-TS4200/KX-TS4300 Intercom work at similar frequencies. Please contact Panasonic at 1-800-211-PANA (1-800-211-7262) for special wiring configurations.

PDF Eraser Free

Connecting four single-line telephone jacks

For this connection, please purchase two Panasonic 2-line adaptors KX-J24 and two 2-wire telephone line cords (Order No. PQJA10075Z) (see “Additional/replacement accessories” on page 5).

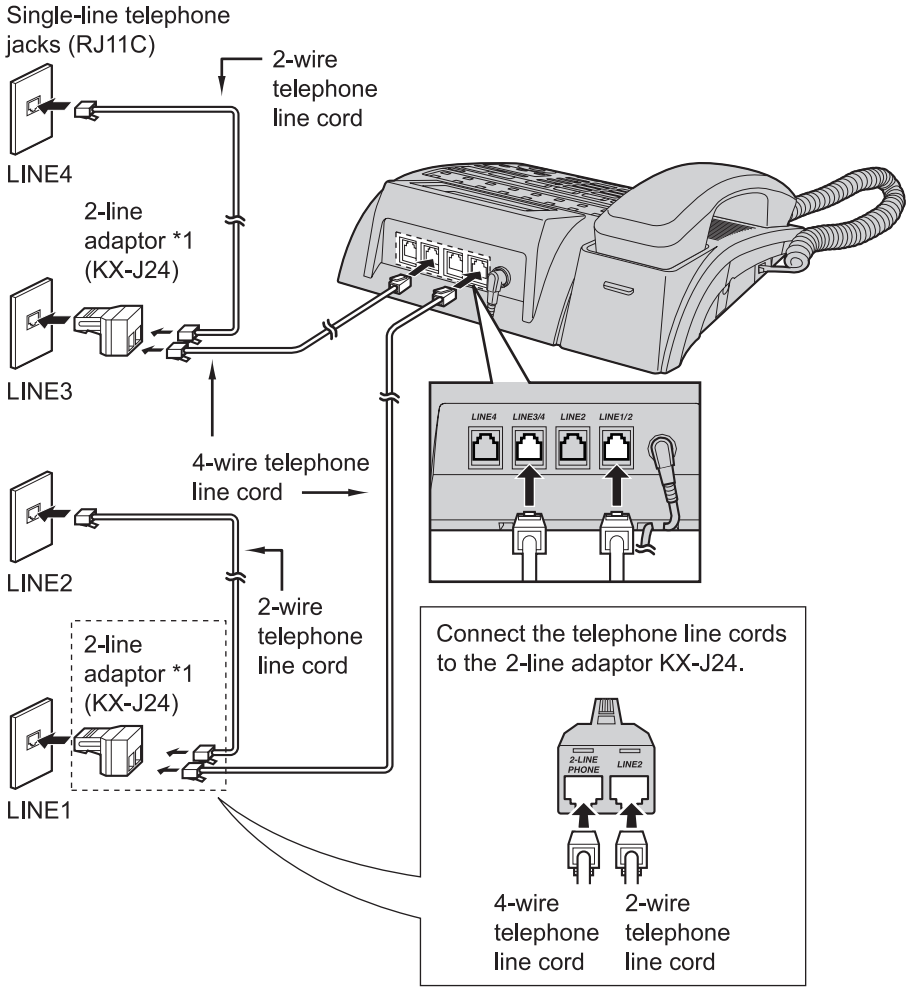

*1 2-line adaptor merges a 2-wire (single line) telephone outlet with another 2-wire (single line) telephone line onto a single 4-wire (2-line) telephone line cord.

DSL Internet connection and KX-TS4100/KX-TS4200/KX-TS4300 Intercom work at similar frequencies. Please contact Panasonic at 1-800-211-PANA (1-800-211-7262) for special wiring configurations.

PDF Eraser Free

If you subscribe to a DSL service

Please attach a noise filter (contact your DSL provider) to the telephone line between the unit and the telephone line jack in the event of the following:
– Noise is heard during conversations.
– Caller ID features (see “Using Caller ID service” on page 43) do not function properly.

Connecting 2 two-line telephone jacks

For this connection, please purchase a Panasonic 2-line splitter KX-J42 and two 2-wire telephone line cords (Order No. PQJA10075Z) (see “Additional/replacement accessories” on page 5).

Example: DSL line is LINE2.

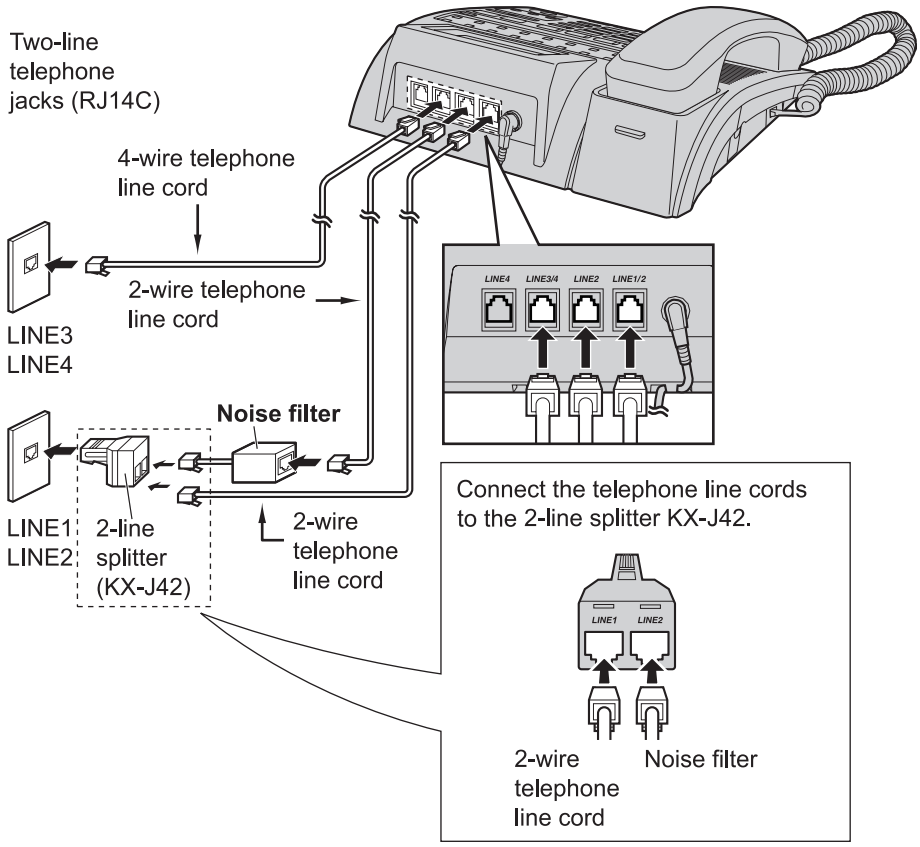

DSL Internet connection and KX-TS4100/KX-TS4200/KX-TS4300 Intercom work at similar frequencies. Please contact Panasonic at 1-800-211-PANA (1-800-211-7262) for special wiring configurations.

PDF Eraser Free

Connecting four single-line telephone jacks

For this connection, please purchase a Panasonic 2-line adaptor KX-J24 and three 2-wire telephone line cords (Order No. PQJA10075Z) (see “Additional/replacement accessories” on page 5).

Example: DSL line is LINE2.

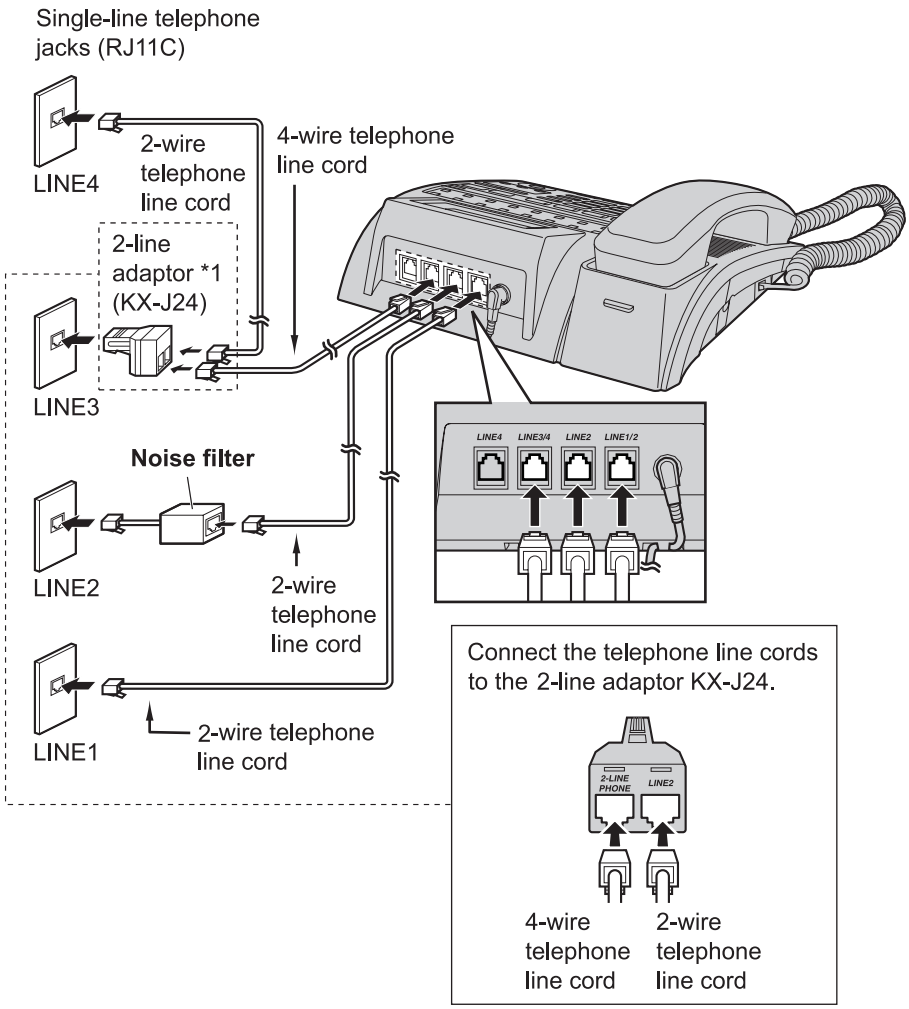

*1 2-line adaptor merges a 2-wire (single line) telephone outlet with another 2-wire (single line) telephone line onto a single 4-wire (2-line) telephone line cord.

DSL Internet connection and KX-TS4100/KX-TS4200/KX-TS4300 Intercom work at similar frequencies. Please contact Panasonic at 1-800-211-PANA (1-800-211-7262) for special wiring configurations.

PDF Eraser Free

Setting up the line group

If you have more than 2 system phones (KX-TS4100/KX-TS4200/KX-TS4300) and use more than 4 lines in your system phones, you can set up the line group to work correctly with the units. To program the line group, see “Line group” on page 51.

Important:

- You can set up the line group only for LINE4.

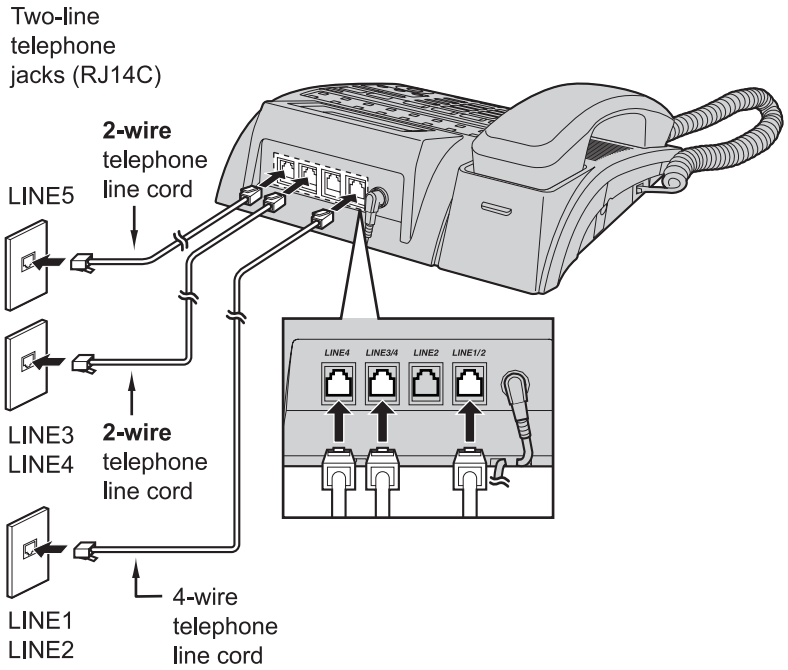

Note:

- You can set up the line group unconnected from other extensions (private line). To program the private line, see “Line group” on page 51.

DSL Internet connection and KX-TS4100/KX-TS4200/KX-TS4300 Intercom work at similar frequencies. Please contact Panasonic at 1-800-211-PANA (1-800-211-7262) for special wiring configurations.

PDF Eraser Free

Example:

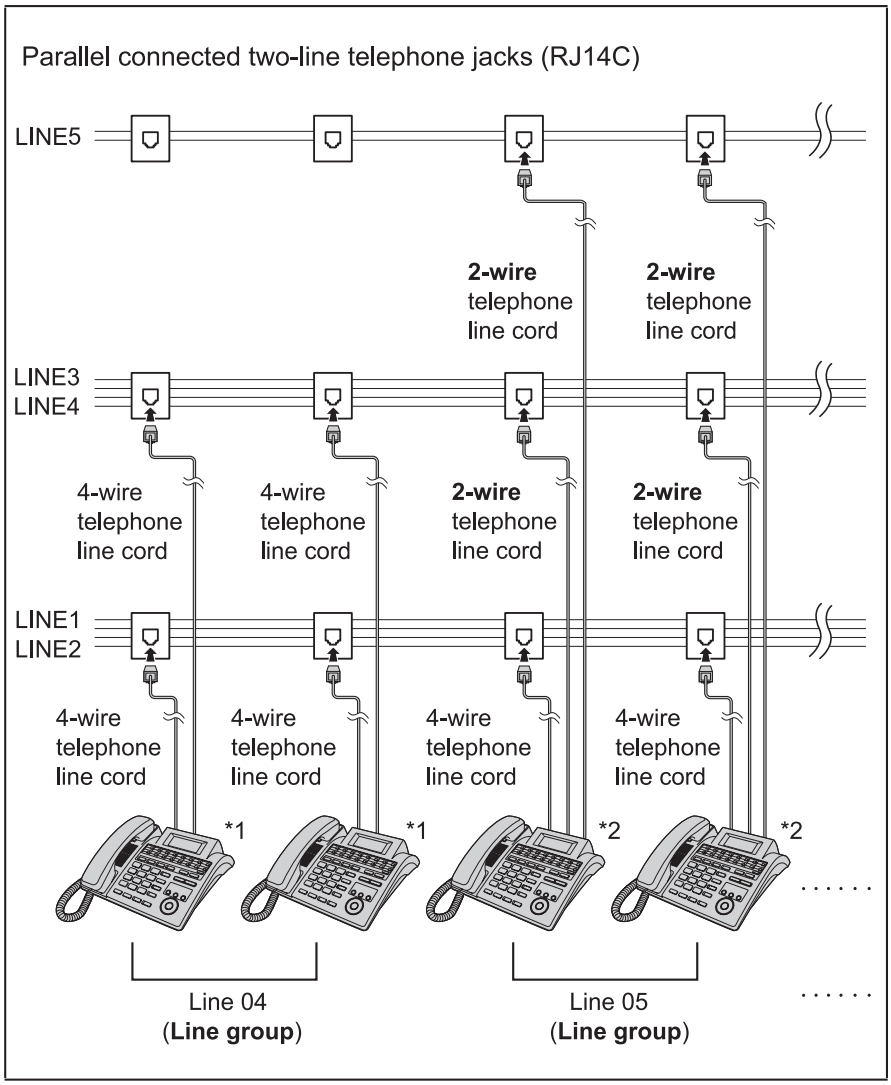

*1 This unit uses the LINE1/2 (with 4-wire telephone line cord) and LINE3/4 (with 4-wire telephone line cord) jacks.

*2 This unit uses the LINE1/2 (with 4-wire telephone line cord), LINE3/4 (with **2-wire** telephone line cord), and LINE4 (with **2-wire** telephone line cord) jacks.

DSL Internet connection and KX-TS4100/KX-TS4200/KX-TS4300 Intercom work at similar frequencies. Please contact Panasonic at 1-800-211-PANA (1-800-211-7262) for special wiring configurations.

PDF Eraser Free

Connecting a communication device

After connecting the telephone line cords to two-line telephone jacks, you can connect a communication device (computer, modem, fax, etc.) through this unit using the LINE2 or LINE4 jacks.

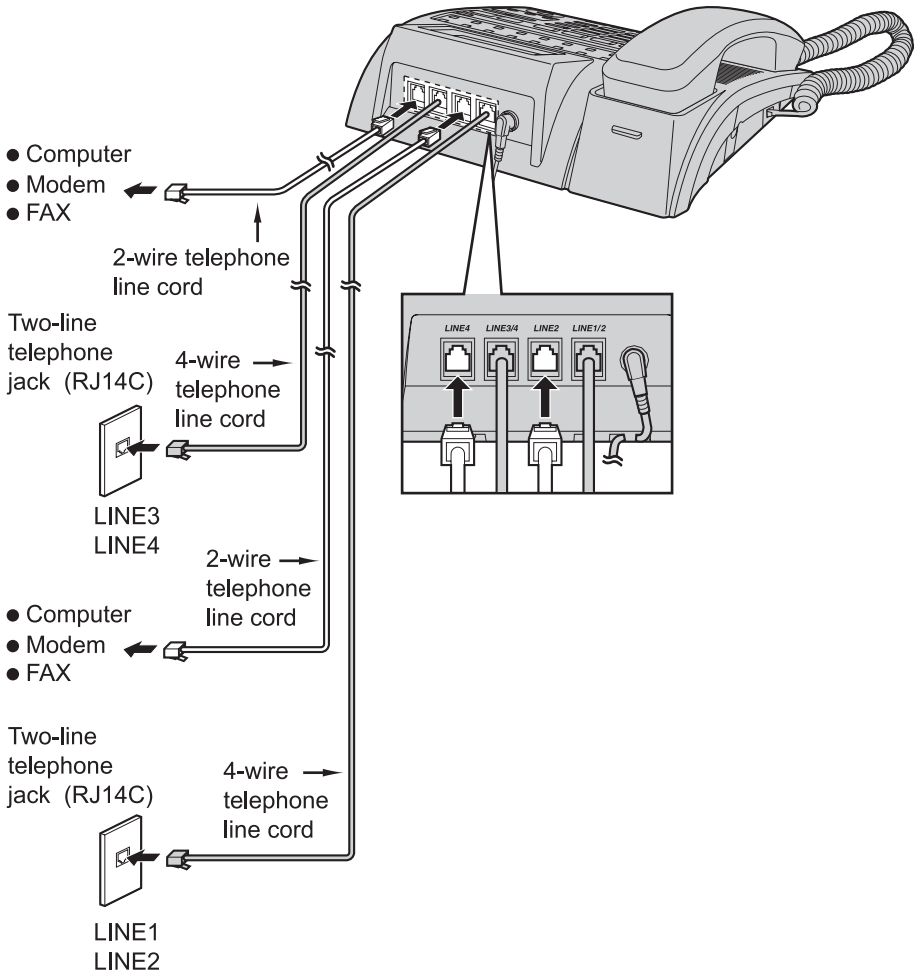

Note:

- If the communication device is in use, use LINE1 or LINE3 to make or answer other calls. Otherwise the communication device may not operate properly.

DSL Internet connection and KX-TS4100/KX-TS4200/KX-TS4300 Intercom work at similar frequencies. Please contact Panasonic at 1-800-211-PANA (1-800-211-7262) for special wiring configurations.

PDF Eraser Free

Setting the unit before use

Display language

Choose whether the display appears in English or Spanish. The default setting is "**English**".

Important:
- Make sure that the unit is in standby mode.

1 Press 【**MENU/SET**】.

2 Select "**Phone Setup**", then press 【**MENU/SET**】.

3 Select "**Language**", then press 【**MENU/SET**】.

```
→Language
 Extension No.
 Date & Time
[▼/▲]:Scroll
```

4 Select the desired setting, then press 【**MENU/SET**】.

```
Language
=English
[SET]:Save
[▼/▲]:Change
```

5 Press and hold 【**MENU/SET**】 to return to standby mode.

Note:
- To return to the previous menu, press 【◀】.
- If you select a language you cannot read, press 【**MENU/SET**】 2 times, press 【▼】, press 【**MENU/SET**】, select the desired language, then press 【**MENU/SET**】.

Extension No.

Assign the extension number ("**11**" to "**26**") to the unit to use the intercom feature. The default setting is "**11**".

Important:
- Make sure that the unit is in standby mode.

1 Press 【**MENU/SET**】.

2 Select "**Phone Setup**", then press 【**MENU/SET**】.

3 Select "**Extension No.**", then press 【**MENU/SET**】.

```
→Extension No.
 Date & Time
 Auto Mute
[▼/▲]:Scroll
```

4 Select the desired number, then press 【**MENU/SET**】.

```
Extension No.
=11
[SET]:Save
[▼/▲]:Change
```

If you try to assign an extension number which is already used:
The display shows "**(In Use)**".

```
Extension No.
=11 (In Use)
Please Re-Assign
Another EXT#
```

Press 【▼】 or 【▲】 to select a different extension number, then press 【**MENU/SET**】.

5 Press and hold 【**MENU/SET**】 to return to standby mode.

Note:
- To return to the previous menu, press 【◀】.
- If you are going to add another station to your existing telephone system, assign a different extension number.

PDF Eraser Free

Date and time

Set the correct date and time.

Important:
- Make sure that the unit is in standby mode.

1 Press 【**MENU/SET**】.

2 Select "**Phone Setup**", then press 【**MENU/SET**】.

3 Select "**Date & Time**", then press 【**MENU/SET**】.

```
→Date & Time
 Auto Mute
 Tone/Pulse
[▼/▲]:Scroll
```

4 Enter the current year by selecting 2 digits, then press 【**MENU/SET**】.
Example: 2006
【**0**】【**6**】
- You can set the year 2000 to 2099.

5 Enter the current month and day by selecting 2 digits for each, then press 【**MENU/SET**】.
Example: August 15
【**0**】【**8**】【**1**】【**5**】

6 Enter the current hour and minute (12-hour clock format) by selecting 2 digits for each, then press 【**MENU/SET**】.
Example: 9:30
【**0**】【**9**】【**3**】【**0**】

7 Select "**A**" (AM) or "**P**" (PM), then press 【**MENU/SET**】.

8 Press and hold 【**MENU/SET**】 to return to standby mode.

Note:
- To return to the previous menu, press 【◀】.
- If you make a mistake when entering the date and time, press 【◀】 or 【▶】 to move the cursor, then make the correction.

Dialing mode

If you cannot make calls, change this setting depending on your telephone line service. The default setting is "**Tone**".
"**Tone**": For tone dial service.
"**Pulse**": For rotary pulse dial service.

Important:
- Make sure that the unit is in standby mode.

1 Press 【**MENU/SET**】.

2 Select "**Phone Setup**", then press 【**MENU/SET**】.

3 Select "**Tone/Pulse**", then press 【**MENU/SET**】.

```
→Tone/Pulse
 Flash Time
 Hold Reminder
[▼/▲]:Scroll
```

4 Select the desired setting, then press 【**MENU/SET**】.

```
Tone/Pulse
=Tone
[SET]:Save
[▼/▲]:Change
```

5 Press and hold 【**MENU/SET**】 to return to standby mode.

Note:
- To return to the previous menu, press 【◀】.

PDF Eraser Free

Making calls

Using the handset

1 Lift the handset.
- The prime line (see “Prime line” on page 50) is automatically selected and the line indicator lights.
- The display shows the length of the call.

2 Dial the phone number.
- The dialed number is displayed. If you dial a phone number longer than 15 digits, all the digits will be shifted to the left side.

3 When you finish talking, place the handset on the cradle.
- The line indicator goes out.
- The length of the call will remain on the display for a few seconds.

Note:
- The line indicator flashes while another phone is using the line.

Using the speakerphone

1 Press 【**SP-PHONE**】.
- The SP-PHONE indicator lights.
- The prime line (see “Prime line” on page 50) is automatically selected and the line indicator lights.
- The display shows the length of the call.

2 Dial the phone number.
- The dialed number is displayed. If you dial a phone number longer than 15 digits, all the digits will be shifted to the left side.
- If you misdial, press 【**SP-PHONE**】 and start again from step 1.

3 When you finish talking, press 【**SP-PHONE**】.
- The SP-PHONE and the line indicators go out.
- The length of the call will remain on the display for a few seconds.

Note:
- The line indicator flashes while another phone is using the line.
- Use the speakerphone in a quiet environment.
- In step 1, you can select a line by pressing a line button with an unlit indicator instead of pressing 【**SP-PHONE**】. Be sure that the handsfree mode is set to “**Speakerphone**” (see “Handsfree mode” on page 50).

Switching between handset and speakerphone

Switching from handset to speakerphone
Press 【**SP-PHONE**】, then place the handset on the cradle.

Switching from speakerphone to handset
Lift the handset.

Adjusting the handset volume (5 levels) or speaker volume (8 levels)

Press 【**−**】 or 【**+**】 repeatedly while talking.

Redialing the last number dialed

1 Lift the handset or press 【**SP-PHONE**】 or a line button.

2 Press 【**REDIAL/PAUSE**】.

Making a call using the redial list

The last 6 phone numbers dialed are stored in the redial list.

1 Press 【**REDIAL/PAUSE**】.

2 Press 【▼】 or 【▲】 to select the desired number.

3 Lift the handset or press 【**SP-PHONE**】 or a line button.

PDF Eraser Free

Erasing a number in the redial list

Important:
- Make sure that the unit is in standby mode.

1 Press 【**REDIAL/PAUSE**】.

2 Press 【▼】 or 【▲】 to select the desired number, then press 【**ERASE**】.

3 Select "**Yes?**", then press 【**ERASE**】 or 【**MENU/SET**】.

```
3215555

Erase
Yes?
```

- To cancel, select "**No?**", then press 【**MENU/SET**】.

4 Press 【**REDIAL/PAUSE**】 to return to standby mode.

Note:
- To return to the previous menu, press 【◀】.

PAUSE button (for PBX/long distance service users)

A pause is sometimes required when making calls using a PBX or long distance service. When storing a calling card access number and/or PIN in the phonebook, a pause is also needed (see "Chain dial" on page 34).
For example, if you need to dial the line access number "9" when making outside calls with a PBX:

1 Lift the handset or press 【**SP-PHONE**】 or a line button.

2 Press 【**9**】, then press 【**REDIAL/PAUSE**】.

3 Dial the phone number.

Note:
- A 3.5 second pause is inserted each time 【**REDIAL/PAUSE**】 is pressed. Press repeatedly to insert longer pauses.

Answering calls

When a call is being received, the unit rings and the called line indicator flashes rapidly.

Using the handset

1 Lift the handset.

2 When you finish talking, place the handset on the cradle.

Using the speakerphone

1 Press 【**SP-PHONE**】.

2 Speak into the MIC.

3 When you finish talking, press 【**SP-PHONE**】.

Note:
- In step 1, you can also answer the call by pressing the flashing line button. Be sure that the handsfree mode is set to "**Speakerphone**" (see "Handsfree mode" on page 50).

Adjusting the ringer volume (4 levels)

Press 【**−**】 or 【**+**】 repeatedly when in standby mode.

Turning ringer on/off

Turn the ringer on/off for each line.

Important:
- Make sure that the unit is in standby mode.

1 Press 【**MENU/SET**】.

2 Select "**Advanced Setup**", then press 【**MENU/SET**】.

PDF Eraser Free

3 Select "**Ringer On/Off**", then press 【**MENU/SET**】.

```
→Ringer On/Off
 Ringer Type
 Line Group
[▼/▲]:Scroll
```

4 Select the line you want to set, then press 【**MENU/SET**】.

```
→Line1 Ringer
 Line2 Ringer
 Line3 Ringer
[▼/▲]:Scroll
```

5 Select the desired setting, then press 【**MENU/SET**】.

```
Line1 Ringer
=On
[SET]:Save
[▼/▲]:Change
```

6 Press and hold 【**MENU/SET**】 to return to standby mode.

Note:
- To return to the previous menu, press 【◀】.

Ringer type

Select a ring pattern (4 types) for each line.

Important:
- Make sure that the unit is in standby mode.

1 Press 【**MENU/SET**】.

2 Select "**Advanced Setup**", then press 【**MENU/SET**】.

3 Select "**Ringer Type**", then press 【**MENU/SET**】.

```
→Ringer Type
 Line Group
 Display MSGW
[▼/▲]:Scroll
```

4 Select the line you want to set, then press 【**MENU/SET**】.

```
→Line1 Ring Type
 Line2 Ring Type
 Line3 Ring Type
[▼/▲]:Scroll
```

5 Select the desired setting, then press 【**MENU/SET**】.

```
Line1 Ring Type
=Type-1
[SET]:Save
[▼/▲]:Change
```

6 Press and hold 【**MENU/SET**】 to return to standby mode.

Note:
- To return to the previous menu, press 【◀】.
- Incoming intercom calls use Type-1 and cannot be changed.

Turning Do Not Disturb (DND) on/off

You will not hear call rings or paging when this feature is activated. The line indicator flashes for outside calls and the INTERCOM indicator flashes for intercom calls.

Press 【**DND**】 to turn on/off the Do Not Disturb (DND) feature.
- When the Do Not Disturb (DND) feature is turned on, the DND indicator lights and the display shows "**DND**".

```
03:45P 02/23 MON
DND 11
CID:100/198 MSGW
            1 34
```

- When the Do Not Disturb (DND) feature is turned off, the DND indicator goes out.

PDF Eraser Free

Making/answering another outside call during a conversation

If you hear beeps during a conversation and another line indicator flashes rapidly, an incoming call is being received. You can answer the 2nd call while holding the 1st call.

1 Press 【**HOLD**】 to put the 1st call on hold.
- The line indicator flashes.
- If you press the other line button before pressing 【**HOLD**】, the 1st call is disconnected.

2 To answer a 2nd call, press the relevant line button.
To make a 2nd call, press the other line button or 【**SP-PHONE**】, then dial the phone number.
- The other line indicator lights.

3 To return to the 1st call, press the line button for the 1st call.
- The 2nd call is disconnected.
- To hold the 2nd call in step 3, press 【**HOLD**】 before pressing the line button for the 1st call.

Note:
- When the Do Not Disturb (DND) feature is turned on, beeps will not be heard during a conversation.
- To establish a conference call, see “Conference calls” on page 41.

Useful features during a call

Call privacy

Call privacy allows you to prevent other extensions from joining your conversations with outside callers. The phone always keeps call privacy on unless you manually turn this feature off.

Call privacy release

During the call, press the line button for the call. You will hear a double-beep.
- Any system phones can join the call by pressing the relevant line button.

Call privacy release recover

Press the line button again during the call. You will hear a 3-beep.

Note:
- Call privacy will turn on again automatically when you hang up.
- If a non-system phone is connected on the same line, this feature does not work for the phone.
- When a non-system phone answers a call, any system phones can join the call by pressing the relevant line button.

HOLD button

This feature allows you to put a call on hold (for an outside call only).

To put a call on hold

During an outside call, press 【**HOLD**】.
- The line indicator flashes.
- If using the handset, you can place it on the cradle.
- To transfer the call to another extension, see “Transferring calls” on page 40.

PDF Eraser Free

To release the hold

Press the line button.
- The other extension users can take the call by pressing their line buttons.

Note:
- If a call is kept on hold for more than 60 or 120 seconds, an alarm tone starts to sound (hold reminder). To turn off the hold reminder, see “Hold reminder” on page 29.
- If a call is kept on hold for more than 5 minutes, the call is disconnected. To keep a call on hold longer than 5 minutes, release hold before 5 minutes and then place the call on hold again.

Hold reminder

This feature reminds you the call is on hold by sounding a 4-tone alarm every 60 or 120 seconds. The default setting is “**60 Seconds**”.

Important:
- Make sure that the unit is in standby mode.

1 Press 【**MENU/SET**】.

2 Select “**Phone Setup**”, then press 【**MENU/SET**】.

3 Select “**Hold Reminder**”, then press 【**MENU/SET**】.

```
→Hold Reminder
 Handsfree Mode
 Prime Line
[▼/▲]:Scroll
```

4 Select the desired setting, then press 【**MENU/SET**】.

```
Hold Reminder
= 60 Seconds
[SET]:Save
[▼/▲]:Change
```

5 Press and hold 【**MENU/SET**】 to return to standby mode.

Note:
- To return to the previous menu, press 【◀】.

MUTE button

While mute is turned on, you can hear the other party, but the other party cannot hear you.

To mute your voice, press 【**MUTE**】.
- The MUTE indicator lights.
- To return to the conversation, press 【**MUTE**】 again. The MUTE indicator goes out.
- When you switch between the handset and the speakerphone or press 【**FLASH**】, mute will be released.

FLASH button

Pressing 【**FLASH**】 allows you to use special features of your host PBX such as transferring an extension call, or accessing optional telephone services such as Call Waiting.

Note:
- To change the flash time, see “Flash time” on page 30.

For Call Waiting service users

To use Call Waiting, you must subscribe to Call Waiting service of your telephone service provider.
This feature allows you to receive calls while you are already talking on the phone.
If you receive a call while on the phone, you will hear a Call Waiting tone.

Press 【**FLASH**】 to answer the 2nd call after the tone.
- To switch between calls, press 【**FLASH**】.

Note:
- Please contact your telephone service provider for details and availability of this service in your area.

PDF Eraser Free

Flash time

The flash time depends on your telephone exchange or host PBX. You can select the following flash time: **80 ms**, **100 ms**, **200 ms**, **300 ms**, **400 ms**, **500 ms**, **600 ms**, and **700 ms**.
The default setting is "**600 ms**".

Important:
- Make sure that the unit is in standby mode.

1 Press 【**MENU/SET**】.

2 Select "**Phone Setup**", then press 【**MENU/SET**】.

3 Select "**Flash Time**", then press 【**MENU/SET**】.

```
→Flash Time
 Hold Reminder
 Handsfree Mode
[▼/▲]:Scroll
```

4 Select the desired setting, then press 【**MENU/SET**】.

```
Flash Time
=600 ms
[SET]:Save
[▼/▲]:Change
```

5 Press and hold 【**MENU/SET**】 to return to standby mode.

Note:
- To return to the previous menu, press 【◀】.
- If you are connected via a PBX, a longer flash time may be necessary to use PBX functions (transferring a call, etc.). Consult your PBX installer for the correct setting.

Temporary tone dialing (for rotary/pulse service users)

You can temporarily switch the dialing mode to tone when you need to access touch tone services (for example, answering services, telephone banking services, etc.).

Press 【✱】 (TONE) before entering access numbers which require tone dialing.

PDF Eraser Free

Phonebook

You can add up to 200 items to the phonebook and search for phonebook items by name.

Adding items to the phonebook

Important:
- Make sure that the unit is in standby mode.

1 Press 【**PHONEBOOK**】.
- If the display shows "`(Full)`", erase other items from the phonebook (see "Erasing one item in the phonebook" on page 34).

2 Select "`Add New Record`", then press 【**MENU/SET**】.

```
Phonebook (029)
 View Records
→Add New Record
[▼/▲]:Scroll
```

- The total number of items in the phonebook are shown on the display.
- If there are no items in the phonebook, the display will show "`(Empty)`".

3 Enter the name (max. 16 characters; see "Character table" on page 31).

4 Select "`Done`", then press 【**MENU/SET**】.
- To cancel, select "`Cancel`", then press 【**MENU/SET**】.

5 Enter the phone number (max. 24 digits).
- If required, you can insert 【**FLASH**】, 【**REDIAL/PAUSE**】 or 【**＊**】 (TONE) in a phone number.
- To add the last number dialed, you can press 【**REDIAL/PAUSE**】 instead of entering the phone number.

6 Select "`Done`", then press 【**MENU/SET**】.
- To cancel, select "`Cancel`", then press 【**MENU/SET**】.
- To add other items, repeat from step 2.

7 Press 【**PHONEBOOK**】 to return to standby mode.

Note:
- To return to the previous menu, press 【◀】.

Character table

Key	Character
【1】	, - ' & . ( ) @ ! 1
【2】	A B C a b c 2
【3】	D E F d e f 3
【4】	G H I g h i 4
【5】	J K L j k l 5
【6】	M N O m n o 6
【7】	P Q R S p q r s 7
【8】	T U V t u v 8
【9】	W X Y Z w x y z 9
【0】	Space 0
【＊】	＊
【#】	#

- To enter another character that is located on the same dial key, first press 【▶】 to move the cursor to the next space.

Editing/correcting a mistake

Press 【◀】 or 【▶】 to move the cursor to the character or number you want to erase, then press 【**ERASE**】. Enter the appropriate character or number.

PDF Eraser Free

Storing items from the phonebook into the speed dialer

Important:
- Make sure that the unit is in standby mode.

1 Press 【**PHONEBOOK**】.

2 Select "`View Records`", then press 【**MENU/SET**】.

3 Press 【▼】 or 【▲】 to select the desired item, then press 【**MENU/SET**】.
- To search for the item by initial, see "Searching for a name by initial" on page 33.

4 Select "`Copy To SPD`", then press 【**MENU/SET**】.

5 Press the speed dial button (【**1**】 to 【**16**】).
OR
Press 【**LOWER**】, then press the speed dial button (【**1**】 to 【**16**】).

6 Press 【**PHONEBOOK**】 to return to standby mode.

Note:
- To return to the previous menu, press 【◀】.
- If the speed dial has already stored the content, you can select whether it should be replaced or not. To replace current content, select "`Yes?`", then press 【**MENU/SET**】. To keep original content, select "`No?`", then press 【**MENU/SET**】.

Storing items from the redial list into the phonebook

Important:
- Make sure that the unit is in standby mode.

1 Press 【**REDIAL/PAUSE**】.

2 Press 【▼】 or 【▲】 to select the desired number, then press 【**MENU/SET**】.

3 Select "`Copy To PhBook`", then press 【**MENU/SET**】.

4 Enter the name (max. 16 characters; see "Character table" on page 31).

5 Select "`Done`", then press 【**MENU/SET**】.
- To cancel, select "`Cancel`", then press 【**MENU/SET**】.

6 Edit the phone number if necessary.
- If required, you can insert 【**FLASH**】, 【**REDIAL/PAUSE**】 or 【✱】 (TONE) in a phone number.

7 Select "`Done`", then press 【**MENU/SET**】.
- To cancel, select "`Cancel`", then press 【**MENU/SET**】.

8 Press 【**REDIAL/PAUSE**】 to return to standby mode.

Note:
- To return to the previous menu, press 【◀】.

PDF Eraser Free

Finding and calling a phonebook item

Phonebook items can be searched for alphabetically by scrolling through the phonebook items or by entering the first initial.

Searching for a name alphabetically by scrolling through all items

1 Press 【PHONEBOOK】.

2 Select "View Records", then press 【MENU/SET】.

3 Press 【▼】 or 【▲】 to select the desired item.

4 Lift the handset or press 【SP-PHONE】 or a line button to dial the phone number.

Searching for a name by initial

1 Press 【PHONEBOOK】.

2 Press the dialing key (【0】 to 【9】, 【#】, or 【✱】) that corresponds to the first letter you are searching for (see "Character table" on page 31).
Example: "LISA"
Press 【5】 repeatedly to display the first phonebook entry starting with the initial "L" and go to step 3.
- If there is no item corresponding to the letter you selected, "No Entries" is displayed.

3 Press 【▼】 or 【▲】 to select the desired item.

4 Lift the handset or press 【SP-PHONE】 or a line button to dial the phone number.

Editing items in the phonebook

Important:
- Make sure that the unit is in standby mode.

1 Press 【PHONEBOOK】.

2 Select "View Records", then press 【MENU/SET】.

3 Press 【▼】 or 【▲】 to select the desired item, then press 【MENU/SET】.
- To search for the item by initial, see "Searching for a name by initial" on page 33.

4 Select "Edit", then press 【MENU/SET】.

5 Edit the name if necessary (see "Character table" on page 31).

6 Select "Done", then press 【MENU/SET】.
- To cancel, select "Cancel", then press 【MENU/SET】.

7 Edit the phone number if necessary.
- If required, you can insert 【FLASH】, 【REDIAL/PAUSE】 or 【✱】 (TONE) in a phone number.

8 Select "Done", then press 【MENU/SET】.
- To cancel, select "Cancel", then press 【MENU/SET】.

9 Press 【PHONEBOOK】 to return to standby mode.

Note:
- To return to the previous menu, press 【◀】.

PDF Eraser Free

Erasing one item in the phonebook

Important:
- Make sure that the unit is in standby mode.

1 Press 【**PHONEBOOK**】.

2 Select "`View Records`", then press 【**MENU/SET**】.

3 Press 【▼】 or 【▲】 to select the desired item, then press 【**ERASE**】.
- To search for the item by initial, see "Searching for a name by initial" on page 33.

4 Select "`Yes?`", then press 【**ERASE**】 or 【**MENU/SET**】.
- To cancel, select "`No?`", then press 【**MENU/SET**】.

5 Press 【**PHONEBOOK**】 to return to standby mode.

Note:
- To return to the previous menu, press 【◀】.

Erasing all items in the phonebook

Important:
- Make sure that the unit is in standby mode.

1 Press 【**PHONEBOOK**】.

2 Select "`View Records`", then press 【**MENU/SET**】.

3 Select "`End Of List`" by pressing 【▲】, then press 【**ERASE**】.

4 Select "`Yes?`", then press 【**ERASE**】 or 【**MENU/SET**】.
- To cancel, select "`No?`", then press 【**MENU/SET**】.

5 Press 【**PHONEBOOK**】 to return to standby mode.

Note:
- To return to the previous menu, press 【◀】.

Chain dial

This feature allows you to dial phone numbers in the phonebook while you are on a call. This feature can be used, for example, to dial a calling card access number or bank account PIN that you have stored in the phonebook, without having to dial manually.

1 During an outside call, press 【**PHONEBOOK**】.

2 Select "`View Records`", then press 【**MENU/SET**】.

3 Press 【▼】 or 【▲】 to select the desired item, then press 【**MENU/SET**】.
- To search for the item by initial, see "Searching for a name by initial" on page 33.

4 Select "`Dial`", then press 【**MENU/SET**】.

Note:
- When storing a calling card access number and your PIN in the phonebook as one phonebook item, press 【**REDIAL/PAUSE**】 to add pauses after the number and PIN as necessary (see "PAUSE button (for PBX/long distance service users)" on page 26).
- If you have rotary or pulse service, you need to press 【✱】 (TONE) before pressing 【**PHONEBOOK**】 in step 1 to change the dialing mode temporarily to tone.

PDF Eraser Free

Speed dialer

You can store up to 32 names and phone numbers in the speed dial buttons. (16 names and numbers in upper memory locations, 16 names and numbers in lower memory locations.)

Speed dial preference

If you want to place speed dialer calls using only one button, set this feature to "**CO Call**". If you want to place intercom call using only one button, set this feature to "**Intercom DSS**". If you want to place speed dialer calls after reviewing the entries, set this feature to "**Preview Memory**".

Important:
- Make sure that the unit is in standby mode.

1 Press **【MENU/SET】**.

2 Select "**Phone Setup**", then press **【MENU/SET】**.

3 Select "**Speed Dial**", then press **【MENU/SET】**.

```
→Speed Dial
 Language
 Extension No.
[▼/▲]:Scroll
```

4 Select "**SPD Preference**", then press **【MENU/SET】**.

```
→SPD Preference
 Edit/View SPD

[▼/▲]:Scroll
```

5 Select the desired setting, then press **【MENU/SET】**.

```
SPD Preference
=CO Call
[SET]:Save
[▼/▲]:Change
```

6 Press and hold **【MENU/SET】** to return to standby mode.

Note:
- To return to the previous menu, press **【◀】**.

Adding/editing names and phone numbers

Important:
- Make sure that the unit is in standby mode.

1 Press **【MENU/SET】**.

2 Select "**Phone Setup**", then press **【MENU/SET】**.

3 Select "**Speed Dial**", then press **【MENU/SET】**.

```
→Speed Dial
 Language
 Extension No.
[▼/▲]:Scroll
```

4 Select "**Edit/View SPD**", then press **【MENU/SET】**.

```
→Edit/View SPD
 SPD Preference

[▼/▲]:Scroll
```

5 Press the speed dial button (**【1】** to **【16】**).
OR
Press **【LOWER】**, then press the speed dial button (**【1】** to **【16】**).

```
Edit/View SPD


Select SPD Key
```

6 Press **【MENU/SET】**.

7 Select "**Edit**", then press **【MENU/SET】**.

8 Enter (or edit) the name (max. 16 characters; see "Character table" on page 31).

PDF Eraser Free

- To erase the character, press 【ERASE】 or select "Delete Char", then press 【MENU/SET】.

9 Select "Done", then press 【MENU/SET】.
- To cancel, select "Cancel", then press 【MENU/SET】.

10 Enter (or edit) the phone number (max. 24 digits).
- To erase the number, press 【ERASE】 or select "Delete Char", then press 【MENU/SET】.
- If required, you can insert 【FLASH】, 【REDIAL/PAUSE】 or 【✳】 (TONE) in a phone number.
- To add the last number dialed, you can press 【REDIAL/PAUSE】 instead of entering the phone number.

11 Select "Done", then press 【MENU/SET】.
- To cancel, select "Cancel", then press 【MENU/SET】.

12 Press and hold 【MENU/SET】 to return to standby mode.

Note:
- To return to the previous menu, press 【◀】.

Editing/correcting a mistake

Press 【◀】 or 【▶】 to move the cursor to the character or number you want to erase, then press 【ERASE】. Enter the appropriate character or number.

Storing items from the redial list into the speed dialer

Important:
- Make sure that the unit is in standby mode.

1 Press 【REDIAL/PAUSE】.

2 Press 【▼】 or 【▲】 to select the desired number, then press 【MENU/SET】.

3 Select "Copy To SPD", then press 【MENU/SET】.

4 Press the speed dial button (【1】 to 【16】).
OR
Press 【LOWER】, then press the speed dial button (【1】 to 【16】).

```
3215555


Select SPD Key
```

5 Enter the name (max. 16 characters; see "Character table" on page 31).
- To erase the character, press 【ERASE】 or select "Delete Char", then press 【MENU/SET】.

6 Select "Done", then press 【MENU/SET】.
- To cancel, select "Cancel", then press 【MENU/SET】.

7 Edit the phone number if necessary.
- To erase the number, press 【ERASE】 or select "Delete Char", then press 【MENU/SET】.
- If required, you can insert 【FLASH】, 【REDIAL/PAUSE】 or 【✳】 (TONE) in a phone number.

8 Select "Done", then press 【MENU/SET】.
- To cancel, select "Cancel", then press 【MENU/SET】.

9 Press 【REDIAL/PAUSE】 to return to standby mode.

Note:
- To return to the previous menu, press 【◀】.

PDF Eraser Free

Erasing a stored entry

Important:

- Make sure that the unit is in standby mode.

1 Press 【**MENU/SET**】.

2 Select "**Phone Setup**", then press 【**MENU/SET**】.

3 Select "**Speed Dial**", then press 【**MENU/SET**】.

```
→Speed Dial
 Language
 Extension No.
[▼/▲]:Scroll
```

4 Select "**Edit/View SPD**", then press 【**MENU/SET**】.

```
→Edit/View SPD
 SPD Preference

[▼/▲]:Scroll
```

5 Press the speed dial button (【**1**】 to 【**16**】).
OR
Press 【**LOWER**】, then press the speed dial button (【**1**】 to 【**16**】).

```
Edit/View SPD


Select SPD Key
```

6 Press 【**ERASE**】.

7 Select "**Yes?**", then press 【**ERASE**】 or 【**MENU/SET**】.

- To cancel, select "**No?**", then press 【**MENU/SET**】.

8 Press and hold 【**MENU/SET**】 to return to standby mode.

Note:

- To return to the previous menu, press 【◀】.

Calling someone with the speed dialer

If speed dial preference is set to "CO Call"

Press the desired speed dial button (【**1**】 to 【**16**】).
OR
Press 【**LOWER**】, then press the desired speed dial button (【**1**】 to 【**16**】).

If speed dial preference is set to "Intercom DSS"

1 Lift the handset or press 【**SP-PHONE**】 or a line button.

2 Press the desired speed dial button (【**1**】 to 【**16**】).
OR
Press 【**LOWER**】, then press the desired speed dial button (【**1**】 to 【**16**】).

If speed dial preference is set to "Preview Memory"

1 Press the desired speed dial button (【**1**】 to 【**16**】).
OR
Press 【**LOWER**】, then press the desired speed dial button (【**1**】 to 【**16**】).

- You can review the entries by pressing 【▼】 or 【▲】.

2 Lift the handset or press 【**SP-PHONE**】 or a line button.

PDF Eraser Free

Intercom/Paging

A 2-way intercom can be set up between two extensions. Make sure that each extension has been assigned the number ("11" to "26", see "Extension No." on page 23) and is connected to the LINE1/2 and LINE3/4 telephone jacks of the unit (page 15, 16, 17).
The speed dial (extension) buttons "1, 2, 3...15, 16" mean the extension numbers "11, 12, 13...25, 26".

Note:
- If you press the line button during an intercom call (paging), the intercom call (paging) is disconnected and you can make or answer an outside call.

Making an intercom call

Using the handset

1 Press 【**INTERCOM**】.
- The INTERCOM indicator lights.
- The SP-PHONE indicator lights and the speakerphone turns on.

2 Lift the handset.
- The SP-PHONE indicator goes out.

3 Press the speed dial (extension) button or enter the extension number.

4 To end the intercom call, place the handset on the cradle.
- The INTERCOM indicator goes out.

Using the speakerphone

1 Press 【**INTERCOM**】.
- The INTERCOM indicator lights.
- The SP-PHONE indicator lights and the speakerphone turns on.

2 Press the speed dial (extension) button or enter the extension number.

3 To end the intercom call, press 【**SP-PHONE**】 or 【**INTERCOM**】.
- The INTERCOM and the SP-PHONE indicators go out.

If speed dial preference is set to "Intercom DSS"

1 Press the speed dial (extension) button.
- The INTERCOM indicator lights.
- The SP-PHONE indicator lights and the speakerphone turns on.

2 To end the intercom call, press 【**SP-PHONE**】 or 【**INTERCOM**】.
- The INTERCOM and the SP-PHONE indicators go out.

Answering an intercom call

The INTERCOM indicator flashes rapidly and the extension number of the caller is displayed.

Lift the handset or press 【**SP-PHONE**】 or 【**INTERCOM**】.

Answering an intercom call directed to another extension

Any extensions can answer the intercom call directed to another extension.

Press 【**INTERCOM**】.

PDF Eraser Free

Paging a designated extension

Important:
- Turn Do Not Disturb (DND) off at the destination extension (see "Turning Do Not Disturb (DND) on/off " on page 27).

1 Press 【**INTERCOM**】 2 times.
- The INTERCOM indicator lights.
- The SP-PHONE indicator lights and the speakerphone turns on.

2 Press the speed dial (extension) button or enter the extension number, then speak into the MIC or the handset.
- The destination extension does not ring, instead it will beep 3 times.
- You can make an intercom call by pressing 【**INTERCOM**】.

3 To end the paging, place the handset on the cradle or press 【**SP-PHONE**】.

Answering a single page

If auto mute is set to on
Lift the handset or press 【**MUTE**】.

If auto mute is set to off
Speak into the MIC or the handset.

Turning auto mute on/off
If this feature is set to off, sounds at the paged extension is heard automatically.

Important:
- Make sure that the unit is in standby mode.

1 Press 【**MENU/SET**】.

2 Select "**Phone Setup**", then press 【**MENU/SET**】.

3 Select "**Auto Mute**", then press 【**MENU/SET**】.

```
→Auto Mute
 Tone/Pulse
 Flash Time
[▼/▲]:Scroll
```

4 Select the desired setting, then press 【**MENU/SET**】.

```
Auto Mute
=On
[SET]:Save
[▼/▲]:Change
```

5 Press and hold 【**MENU/SET**】 to return to standby mode.

Note:
- To return to the previous menu, press 【◀】.

Paging all extensions

Important:
- Turn Do Not Disturb (DND) off at the destination extension (see "Turning Do Not Disturb (DND) on/off " on page 27).

1 Press 【**INTERCOM**】.
- The INTERCOM indicator lights.
- The SP-PHONE indicator lights and the speakerphone turns on.

2 Press 【**0**】 to page all extensions, then speak into the MIC or the handset.
- The other extensions will hear your paging voice through the speaker.

3 To end the paging, place the handset on the cradle or press 【**SP-PHONE**】 or 【**INTERCOM**】.

Note:
- You can only talk with an extension who answers first.

Answering all pages

Press 【**INTERCOM**】.

PDF Eraser Free

Room monitor

You can monitor a room using the intercom feature. For example, you can monitor a baby from different areas of the house.
To use this feature, turn auto mute off at the destination extension.

Important:
- Turn auto mute off at the destination extension (see "Turning auto mute on/ off " on page 39).
- Make sure that the destination unit is in standby mode.

1 Press 【**INTERCOM**】 2 times.
- The INTERCOM indicator lights.
- The SP-PHONE indicator lights and the speakerphone turns on.

2 Press the speed dial (extension) button or enter the extension number.
- The destination extension does not ring, instead it will beep 3 times.
- Your unit starts to monitor the room through the extension.
- If necessary, you can mute your sound output by pressing 【**MUTE**】.

3 To end monitoring, press 【**SP-PHONE**】 or place the handset on the cradle.

Note:
- To avoid being monitored and keep privacy, turn Do Not Disturb (DND) on.
- The monitored extension user can stop being monitored by pressing 【**SP-PHONE**】 or 【**INTERCOM**】.

Transferring calls

You can transfer an outside call to another extension.
The speed dial (extension) buttons "1, 2, 3...15, 16" mean the extension numbers "11, 12, 13...25, 26".

Blind transfer

1 During an outside call, press 【**TRANSFER**】 to put the call on hold.

2 Press the speed dial (extension) button or enter the extension number, then place the handset on the cradle.
- If the transferred extension does not answer within 1 minute, the transferred call will ring at all extensions.

Note:
- Any extensions can take a transferred call by pressing the relevant line button.
- If a call is kept on hold for more than 60 or 120 seconds, an alarm tone starts to sound (hold reminder). To turn off the hold reminder, see "Hold reminder" on page 29.
- If a call is kept on hold for more than 5 minutes, the call is disconnected.

Paging before transfer

1 During an outside call, press 【**INTERCOM**】 2 times to put the call on hold.
- You can make an intercom call by pressing 【**INTERCOM**】.

2 Press the speed dial (extension) button or enter the extension number.
- If the paged extension does not answer, press the relevant line button.

PDF Eraser Free

3 After the paged extension answers, announce the transfer.

4 Press 【**TRANSFER**】, then place the handset on the cradle.
- If the transferred extension does not answer within 1 minute, the transferred call will ring at all extensions.

Note:
- Any extensions can take a transferred call by pressing the relevant line button.
- To page all extensions in step 2, press 【**0**】.
- If a call is kept on hold for more than 60 or 120 seconds, an alarm tone starts to sound (hold reminder). To turn off the hold reminder, see "Hold reminder" on page 29.
- If a call is kept on hold for more than 5 minutes, the call is disconnected.

Answering transferred calls

The line indicator flashes rapidly and the extension number of the caller is displayed.

Lift the handset or press 【**SP-PHONE**】 or a line button.

Answering a transferred call directed to another extension

Any extensions can answer a transferred call directed to another extension.

Press the relevant line button.

Conference calls

Conference call with two outside calls

While you are talking with an outside caller, you can make or answer a 2nd call on the other line, and then combine the calls to establish a conference call.

1 During an outside call, press 【**HOLD**】.

2 To answer a 2nd call, press the relevant line button.
To make a 2nd call, press the other line button or 【**SP-PHONE**】, then dial the phone number.

3 When the 2nd call is connected, press 【**CONFERENCE**】 to make a conference call.
- To hang up both lines, place the handset on the cradle or press 【**SP-PHONE**】.
- To hang up only one line, press the line button for the party with which you want to continue talking.
- To put both lines on hold, press 【**HOLD**】.
  - To talk with only one caller, press the line button for the party with which you want to continue talking.
  - To resume both lines, press the relevant line button, then press 【**CONFERENCE**】.

Note:
- If a call is kept on hold for more than 60 or 120 seconds, an alarm tone starts to sound (hold reminder). To turn off the hold reminder, see "Hold reminder" on page 29.
- If a call is kept on hold for more than 5 minutes, the call is disconnected.

PDF Eraser Free

Conference with an outside call and an intercom call

While you are talking with an outside caller, one more extension can join the conversation and establish a conference call.

1 During an outside call, press 【**INTERCOM**】 to put the call on hold.

2 To page another extension, press the speed dial (extension) button or enter the extension number.

3 When the paged party answers, press 【**CONFERENCE**】 to make a conference call.
- To hang up both the outside and intercom calls, place the handset on the cradle or press 【**SP-PHONE**】. (The other remaining parties on the line can still talk.)

Note:
- If a call is kept on hold for more than 60 or 120 seconds, an alarm tone starts to sound (hold reminder). To turn off the hold reminder, see “Hold reminder” on page 29.
- If a call is kept on hold for more than 5 minutes, the call is disconnected.

PDF Eraser Free

Using Caller ID service

This unit is Caller ID compatible. To use Caller ID features, you must subscribe to Caller ID service of your telephone service provider.

Incoming Caller ID display

When an outside call is being received, the date and time of the call, the calling party's name, phone number, and the called line are displayed.
Caller information for the last 200 different callers is logged in the caller list by the most recent call to the oldest. When the caller list is full, the oldest call is deleted.

- Generally caller information is displayed from the 2nd ring.

```
03:45P 02/23
Jack Smith
1-555-321-5555
              L1
```

You can switch the display by pressing 【◀】or【▶】to check the length of the call.

```
03:45P 02/23 MON
00:29
```

- If the unit cannot receive caller information, the following is displayed:
  - "**Out Of Area**": The caller dialed from an area which does not provide Caller ID service.
  - "**Private Caller**": The caller requested not to send caller information.
  - "**Long Distance**": The caller called you long distance.
- If the unit is connected to a PBX system, caller information may not be received properly. Consult your PBX supplier.

Missed calls
If a call is not answered, the unit treats the call as a missed call. The number of missed calls is shown on the display. This lets you know if you should view the caller list to see who called while you were out.

Call Waiting Caller ID display
If you subscribe to both Caller ID and Call Waiting with Caller ID services, the 2nd caller's information is displayed after you hear a Call Waiting tone (see "For Call Waiting service users" on page 29). Please contact your telephone service provider for details and availability of this service in your area.

```
03:45P 02/23
Jack Smith
1-555-321-5555
(Call Waiting)L1
```

Simultaneous ringing on two or more lines
If two or more lines receive calls at the same time, only one caller's information can be displayed at a time.

To review the Caller ID of another line, press【◀】or【▶】.

Home and local area codes
The format of phone numbers displayed will depend on the home and local area codes you programmed into the phone (see "Area codes" on page 45).

- If the incoming call came from your home area code, only the phone number is displayed.
- If the incoming call came from one of your pre-programmed local area codes, the phone number with the local area code prefixed is displayed.
- If the incoming call did not come from any of your area codes, one of the 2 following cases can occur:

PDF Eraser Free

– If the phone number is 10 digits, “1” is automatically inserted and display before the phone number.
– If the phone number is less than 10 digits, only the phone number is displayed.

Example:
Home area code is set to “999”.
Local area code is set to “888”.
– When a number from “999” area code is received (for example, “999-xxx-xxxx”), it displays as a 7-digit number.

xxx-xxxx

– When a number from “888” (set to one of the local area codes) area code is received (for example, “888-xxx-xxxx”), it displays as a 10-digit number.

888-xxx-xxxx

– When a number from “333” (not set to the local area code) area code is received (for example, “333-xxx-xxxx”), it displays as a 11-digit number.

1-333-xxx-xxxx

Note:
- If you are in a region where 10 digits are used to dial within your area code, you are advised to set the home area code to “000” and you must set your area code as a local area code.
- To edit a caller’s phone number, see “Editing a caller’s phone number before calling back” on page 45.

Automatically setting date and time
This phone automatically resets the date and time each time new information is received. You can set the date and time yourself if you wish (see “Date and time” on page 24).

Caller list

Viewing the caller list

Important:
- Make sure that the unit is in standby mode.

1 Press 【**CALLER ID**】.

2 Press 【▼】 to search from the most recent call, or 【▲】 to search from the oldest call.

3 To exit the list, press 【**CALLER ID**】.

Note:
- To return to the previous menu, press 【◀】.

Calling back from the caller list

Important:
- Make sure that the unit is in standby mode.

1 Press 【**CALLER ID**】.

2 Press 【▼】 to search from the most recent call, or 【▲】 to search from the oldest call.

3 Press 【**MENU/SET**】.
- If the number requires editing, see “Editing a caller’s phone number before calling back” on page 45.

4 Select “Dial Alternate” (or “Dial”), then press 【**MENU/SET**】.
- If you want to select a desired line and dial out, press the line button.

Note:
- To return to the previous menu, press 【◀】.

PDF Eraser Free

Editing a caller's phone number before calling back

You can edit a phone number in the caller list by removing its area code and/or the long distance code "1".

Important:
- Make sure that the unit is in standby mode.

1 Press 【**CALLER ID**】.

2 Select the desired item, then press 【**MENU/SET**】.

3 Select "**Dial Alternate**".

4 Press 【▶】 to show the alternate forms of the number. (【◀】 does not work.)

① Local phone number

Example: 321-5555

② Area code - Local phone number

Example: 555-321-5555

③ 1 - Area code - Local phone number

Example: 1-555-321-5555

5 Press 【**MENU/SET**】.

Note:
- To return to the previous menu, press 【◀】.

Area codes

You can program this phone to recognize one home and up to 5 local area codes.
- If you set the home area code, the display shows the 7 digits of the phone number when you receive a call from your home area code.
- If you set the local area code, you can dial 10 digits (without dialing "1") to make a call outside your home area code and the display shows the 10 digits (without "1") of the phone number when you receive a call from one of your local area codes.

Important:
- Make sure that the unit is in standby mode.

1 Press 【**MENU/SET**】.

2 Select "**Advanced Setup**", then press 【**MENU/SET**】.

3 Select "**Area Codes**", then press 【**MENU/SET**】.

```
→Area Codes
 Reset All
 Ringer On/Off
[▼/▲]:Scroll
```

4 Select the area code you want to set, then press 【**MENU/SET**】.

```
→Home Area Code
 Local Area C1
 Local Area C2
[▼/▲]:Scroll
```

5 Enter the area code, then press 【**MENU/SET**】.

6 Press and hold 【**MENU/SET**】 to return to standby mode.

Note:
- To return to the previous menu, press 【◀】.

PDF Eraser Free

Erasing the area code

Important:
- Make sure that the unit is in standby mode.

1 Press 【**MENU/SET**】.

2 Select "**Advanced Setup**", then press 【**MENU/SET**】.

3 Select "**Area Codes**", then press 【**MENU/SET**】.

```
→Area Codes
 Reset All
 Ringer On/Off
[▼/▲]:Scroll
```

4 Select the area code you want to erase, then press 【**MENU/SET**】.

5 Press 【**ERASE**】.

6 Select "**Yes?**", then press 【**ERASE**】 or 【**MENU/SET**】.
- To cancel, select "**No?**", then press 【**MENU/SET**】.

7 Press and hold 【**MENU/SET**】 to return to standby mode.

Note:
- To return to the previous menu, press 【◀】.

Storing caller information into the phonebook

Important:
- Make sure that the unit is in standby mode.

1 Press 【**CALLER ID**】.

2 Select the desired item, then press 【**MENU/SET**】.

3 Select "**Copy To PhBook**".
- To edit the phone number, press 【▶】 repeatedly until the phone number is shown in the desired format. (【◀】 does not work.)

4 Press 【**MENU/SET**】.

5 Press 【**CALLER ID**】 to return to standby mode.

Note:
- To return to the previous menu, press 【◀】.

PDF Eraser Free

Storing caller information into the speed dialer

Important:
- Make sure that the unit is in standby mode.

1 Press 【**CALLER ID**】.

2 Select the desired item, then press 【**MENU/SET**】.

3 Select "`Copy To SPD`".
- To edit the phone number, press 【▶】 repeatedly until the phone number is shown in the desired format. (【◀】 does not work.)

4 Press 【**MENU/SET**】.

5 Press the speed dial button (【**1**】 to 【**16**】).
OR
Press 【**LOWER**】, then press the speed dial button (【**1**】 to 【**16**】).

6 Press 【**CALLER ID**】 to return to standby mode.

Note:
- To return to the previous menu, press 【◀】.
- If the speed dial has already stored the content, you can select whether it should be replaced or not. To replace current content, select "`Yes?`", then press 【**MENU/SET**】. To keep original content, select "`No?`", then press 【**MENU/SET**】.

Erasing selected caller information

Important:
- Make sure that the unit is in standby mode.

1 Press 【**CALLER ID**】.

2 Select the desired item, then press 【**ERASE**】.

3 Select "`Yes?`", then press 【**ERASE**】 or 【**MENU/SET**】.
- To cancel, select "`No?`", then press 【**MENU/SET**】.

4 Press 【**CALLER ID**】 to return to standby mode.

Note:
- To return to the previous menu, press 【◀】.

Erasing all caller information

Important:
- Make sure that the unit is in standby mode.

1 Press 【**CALLER ID**】.

2 Press 【**ERASE**】.

3 Select "`Yes?`", then press 【**ERASE**】 or 【**MENU/SET**】.
- To cancel, select "`No?`", then press 【**MENU/SET**】.

4 Press 【**CALLER ID**】 to return to standby mode.

Note:
- To return to the previous menu, press 【◀】.

PDF Eraser Free

Programmable settings

You can customize the unit by programming the following features.
Make sure that the unit is in standby mode.

Note:
- In the following table, * shows the default setting.
- To return to the previous menu, press 【◀】.
- You can exit feature setup and return to the idle status any time by pressing and holding 【**MENU/SET**】.

Phone Setup

Sub-menu 1	Sub-menu 2	Setting	Page
Speed Dial	SPD Preference	CO Call*, Intercom DSS, Preview Memory	35
	Edit/View SPD	–	35
Language	–	English*, Español	23
Extension No.	–	11* – 26	23
Date & Time	–	2006 12/31 12:00A*	24
Auto Mute	–	On*, Off	39
Tone/Pulse	–	Tone*, Pulse	24
Flash Time	–	80 ms, 100 ms, 200 ms, 300 ms, 400 ms, 500 ms, 600 ms*, 700 ms	30
Hold Reminder	–	60 Seconds*, 120 Seconds, Off	29
Handsfree Mode	–	Headset*, Speakerphone	50
Prime Line	–	Line1*, Line2, Line3, Line4	50

PDF Eraser Free

Advanced Setup

Sub-menu 1	Sub-menu 2	Setting	Page
Ringer On/Off	Line1 Ringer	On*, Off	26
	Line2 Ringer	On*, Off	
	Line3 Ringer	On*, Off	
	Line4 Ringer	On*, Off	
Ringer Type	Line1 Ring Type	Type-1*, Type-2, Type-3, Type-4	27
	Line2 Ring Type	Type-1*, Type-2, Type-3, Type-4	
	Line3 Ring Type	Type-1*, Type-2, Type-3, Type-4	
	Line4 Ring Type	Type-1*, Type-2, Type-3, Type-4	
Line Group	–	Line 04*-15, Private Line	51
Display MSGW	–	On, Off*	52
Clear MSGW	–	Yes, No	52
Area Codes	Home Area Code	3 digits, (Empty)*	45
	Local Area C1	3 digits, (Empty)*	
	Local Area C2	3 digits, (Empty)*	
	Local Area C3	3 digits, (Empty)*	
	Local Area C4	3 digits, (Empty)*	
	Local Area C5	3 digits, (Empty)*	
Reset All	–	Yes, No	51

PDF Eraser Free

Programming the phone setup features

Prime line

If the selected line is ringing or all lines are idle, it has the highest priority to be picked up when you lift the handset or press 【**SP-PHONE**】.

Important:
- Make sure that the unit is in standby mode.

1 Press 【**MENU/SET**】.

2 Select "**Phone Setup**", then press 【**MENU/SET**】.

3 Select "**Prime Line**", then press 【**MENU/SET**】.

```
➔Prime Line
 Speed Dial
 Language
[▼/▲]:Scroll
```

4 Select the desired setting, then press 【**MENU/SET**】.

```
Prime Line
=Line1
[SET]:Save
[▼/▲]:Change
```

5 Press and hold 【**MENU/SET**】 to return to standby mode.

Note:
- To return to the previous menu, press 【◀】.

Handsfree mode

You can use this phone in "Handsfree" mode by using the speakerphone on the unit or a headset (optional).
This feature specifies a mode to be automatically selected each time you press a line key with the handset on the cradle.

Important:
- Make sure that the unit is in standby mode.

1 Press 【**MENU/SET**】.

2 Select "**Phone Setup**", then press 【**MENU/SET**】.

3 Select "**Handsfree Mode**", then press 【**MENU/SET**】.

```
➔Handsfree Mode
 Prime Line
 Speed Dial
[▼/▲]:Scroll
```

4 Select the desired setting, then press 【**MENU/SET**】.

```
Handsfree Mode
=Headset
[SET]:Save
[▼/▲]:Change
```

5 Press and hold 【**MENU/SET**】 to return to standby mode.

Note:
- To return to the previous menu, press 【◀】.
- If you set "Handsfree" mode to "**Headset**" but do not actually have a headset connected, speakerphone will be used.

PDF Eraser Free

Programming the advanced setup features

Line group

You can choose to leave LINE4 unconnected at particular extensions or to connect private lines (constructing a line group) at particular extensions.
To set up the line group, see "Setting up the line group" on page 20.

Important:
- Make sure that the unit is in standby mode.

1 Press 【**MENU/SET**】.

2 Select "**Advanced Setup**", then press 【**MENU/SET**】.

3 Select "**Line Group**", then press 【**MENU/SET**】.

```
→Line Group
 Display MSGW
 Clear MSGW
[▼/▲]:Scroll
```

4 Select the desired setting, then press 【**MENU/SET**】.

```
Line Group
=Line 04
[SET]:Save
[▼/▲]:Change
```

5 Press and hold 【**MENU/SET**】 to return to standby mode.

Note:
- To return to the previous menu, press 【◀】.
- Transferring a call to a different line group through line 4 is not allowed.

Reset all

Return all features to default settings, and all numbers set to speed dial are erased. You cannot undo the "Reset All" command.

Important:
- Make sure that the unit is in standby mode.

1 Press 【**MENU/SET**】.

2 Select "**Advanced Setup**", then press 【**MENU/SET**】.

3 Select "**Reset All**", then press 【**MENU/SET**】.

```
→Reset All
 Ringer On/Off
 Ringer Type
[▼/▲]:Scroll
```

4 Select "**Yes?**", then press 【**MENU/SET**】.

```
Reset All
Yes?
[SET]:Reset
[▼/▲]:Change
```

- To cancel, select "**No?**", then press 【**MENU/SET**】.

5 Press and hold 【**MENU/SET**】 to return to standby mode.

Note:
- To return to the previous menu, press 【◀】.

PDF Eraser Free

Using Voice Mail service

Voice Mail is an automatic answering service offered by your telephone service provider. After you subscribe to this service, the telephone service provider's Voice Mail system will answer calls for you when you are unavailable to answer the phone or when your line is busy. Messages are recorded by the telephone service provider, not your telephone.

Message waiting

If you subscribe to the Voice Mail service, the display will flash when you have unretrieved messages waiting. After retrieving the message, the indicator will be deleted.

```
03:45P 02/23 MON
EXT 11
CID:100/198`MSGW´
           ´1 34`
```

Display message waiting

Turn on or off the current MSGW indicators on the display.

Important:

- Make sure that the unit is in standby mode.

1 Press 【**MENU/SET**】.

2 Select "**Advanced Setup**", then press 【**MENU/SET**】.

3 Select "**Display MSGW**", then press 【**MENU/SET**】.

```
→Display MSGW
 Clear MSGW
 Area Codes
[▼/▲]:Scroll
```

4 Select the desired setting, then press 【**MENU/SET**】.

```
Display MSGW
=Off
[SET]:Save
[▼/▲]:Change
```

5 Press and hold 【**MENU/SET**】 to return to standby mode.

Note:

- To return to the previous menu, press 【◀】.

Clear message waiting

Important:

- Make sure that the unit is in standby mode.

1 Press 【**MENU/SET**】.

2 Select "**Advanced Setup**", then press 【**MENU/SET**】.

3 Select "**Clear MSGW**", then press 【**MENU/SET**】.

```
→Clear MSGW
 Area Codes
 Reset All
[▼/▲]:Scroll
```

4 Select "**Yes?**", then press 【**MENU/SET**】.

```
Clear MSGW
Yes?
[SET]:Clear
[▼/▲]:Change
```

- To cancel, select "**No?**", then press 【**MENU/SET**】.

5 Press and hold 【**MENU/SET**】 to return to standby mode.

Note:

- To return to the previous menu, press 【◀】.

PDF Eraser Free

Headset (optional)

Sales and support information

- To order replacement accessories, call 1-800-332-5368.
- TTY users (hearing or speech impaired users) can call 1-866-605-1277.

Connecting the optional headset to the unit

Connecting a headset to the unit allows hands-free phone conversations. We recommend using the Panasonic headset noted on page 5.

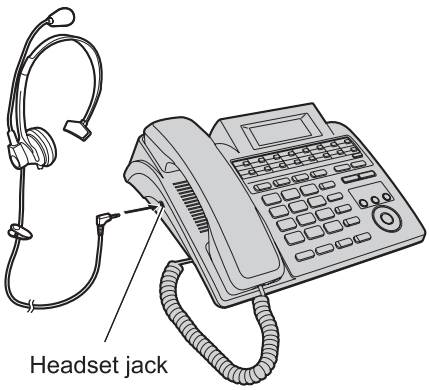

- Headset shown is KX-TCA88HA.

Making/Answering calls

1 Press **【HEADSET】** to make or answer a call.
- If you misdial when making a call, press **【HEADSET】** and start again from step 1.

2 To hang up, press **【HEADSET】**.

To adjust the headset receiver volume (5 levels)

While using the headset, press **【−】** or **【+】**.

Switching between headset, handset, and speakerphone

Switching from handset to headset
Press **【HEADSET】**, then place the handset on the cradle.

Switching from headset to handset
When the handset is on the cradle, lift the handset.
When the handset is off-hook, press **【HEADSET】** again.

Switching from headset to speakerphone
Press **【SP-PHONE】**.

Switching from speakerphone to headset
Press **【HEADSET】**.

Note:
- If you unplug the headset while the phone is in use, the phone will not automatically switch to speakerphone. You must press **【SP-PHONE】** to switch.

PDF Eraser Free

Wall mounting

This unit can be mounted on a wall phone plate.

1 Pull down the handset hook until it locks, **so the tab holds the handset**.

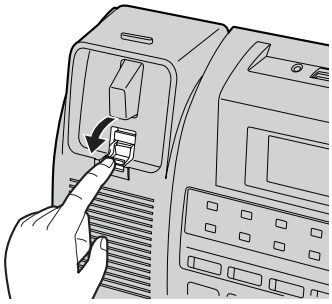

2 Connect the AC adaptor, and dress the AC adaptor cord as shown.

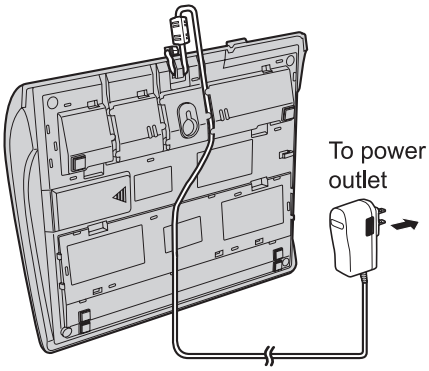

3 Dress the telephone line cord as shown. Tuck the telephone line cord inside the wall mounting adaptor, then push it in the direction of the arrows (① and ②).

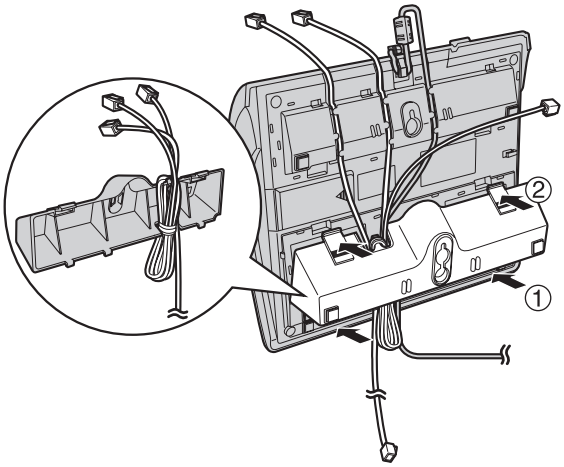

PDF Eraser Free

4 Connect the telephone line cord.
Mount the unit, then slide down.

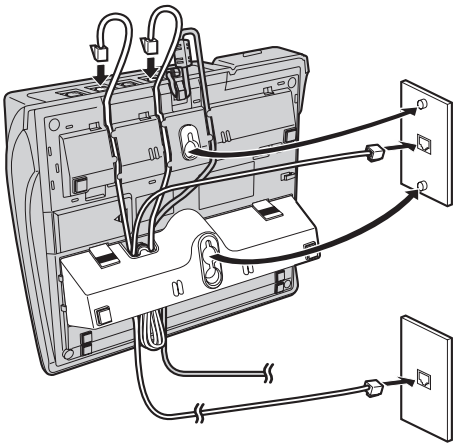

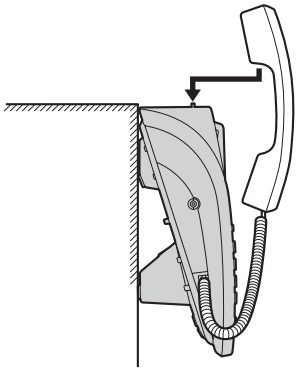

To temporarily set the handset down during a conversation, place it as shown here.

PDF Eraser Free

Connecting a standard telephone

If the backup battery has been discharged during a power failure, the unit will not work. If required, you can connect a standard telephone on LINE 2 or LINE 4 of this unit using the Panasonic T-adaptor KX-J66. To order, call the accessories telephone number on page 5.
Example: Connecting a standard telephone on LINE 4.

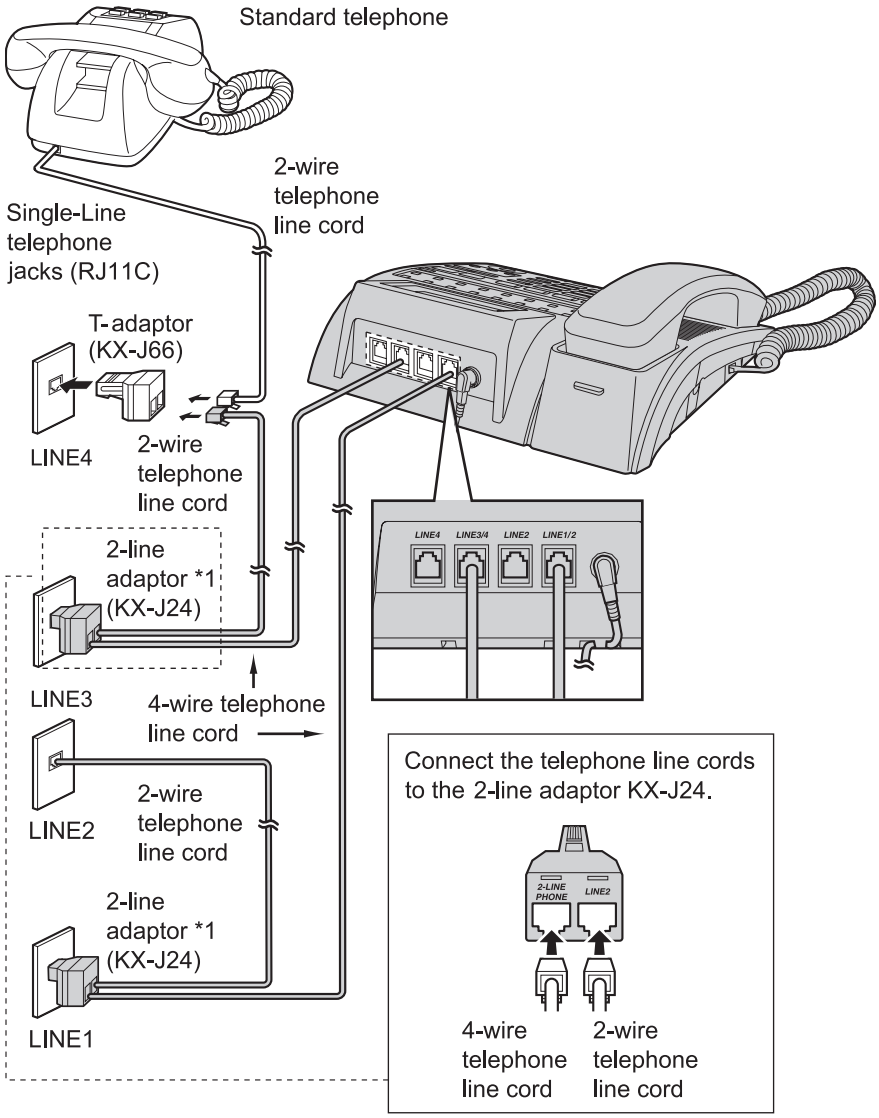

*1 2-line adaptor merges a 2-wire (single line) telephone outlet with another 2-wire (single line) telephone line onto a single 4-wire (2-line) telephone line cord.

PDF Eraser Free

Error messages

If the unit detects a problem, one of the following messages is shown on the display.

Display message	Cause/solution
Phonebook Full!	● There is no space in the phonebook to store new items from the caller list or redial list. Erase unnecessary items (see “Erasing one item in the phonebook” on page 34).
(Full)	● There is no space in the phonebook to store new items. Erase unnecessary items (see “Erasing one item in the phonebook” on page 34).
LOW BATT	● No battery is installed. ● The battery may need to be replaced with a new one (see “Battery replacement” on page 12).
PowerFail	● When the phone is disconnected from a power outlet or there is a power failure, the battery works as emergency power. When power is restored, “**PowerFail**” will disappear on the display.

Troubleshooting

General use

Problem	Cause/solution
The unit does not work.	● Check the connections (page 14, 15, 16, 17). ● Unplug the AC adaptor to reset the unit. Reconnect the adaptor and try again.
The line indicators do not work properly.	● Check the connections (page 14, 15, 16, 17).
The unit does not ring.	● The ringer is set to “**Off**”. Turn it on (see “Turning ringer on/off ” on page 26). ● The Do Not Disturb (DND) feature is turned on. Turn it off (see “Turning Do Not Disturb (DND) on/off” on page 27). ● If there are several non-system phones on the line that do not ring, disconnect some of them. Having too many phones connected can also result in low ringer volumes on non-system phones.

PDF Eraser Free

Problem	Cause/solution
You cannot hear a dial tone.	● Check the connections (see “Connecting the handset and AC adaptor” on page 14). ● Confirm the telephone line cord is properly connected (page 15, 16, 17). ● Disconnect the unit from the telephone line and connect a known working telephone. If the working telephone operates properly, contact our service personnel to have the unit repaired. If the working telephone does not operate properly, contact your telephone service provider.
You cannot dial.	● Check whether the dialing mode selection is correct (see “Dialing mode” on page 24).
Date and time on the display flashes.	● Set the date and time (see “Date and time” on page 24). ● If you subscribe to Caller ID service, date and time is automatically set when an outside call is received (see “Automatically setting date and time” on page 44).
The battery is discharged.	● Please remove the battery when you cut the power supply, as the battery will discharge automatically once the power is cut according to the time shown on page 12.
How do I return to standby mode quickly?	● Lift the handset, then place it back on the cradle. ● Press 【**SP-PHONE**】 2 times.

Programmable settings

Problem	Cause/solution
You cannot program function items, such as the dialing mode.	● Programming is not possible while in the talk or intercom mode. ● Do not pause for over 30 seconds while programming. ● Make sure that the unit is in standby mode.

Making/answering calls, intercom

Problem	Cause/solution
Static is heard, sound cuts in and out.	● If your unit is connected to a telephone line with DSL service, we recommend connecting a noise filter between the unit and the telephone line jack (see “Connecting 2 two-line telephone jacks” on page 18, “Connecting four single-line telephone jacks” on page 19). Contact your DSL provider for details.
You cannot redial the last number dialed.	● If the last number dialed was more than 32 digits long, the number cannot be redialed. ● Access numbers entered after pressing 【＊】 (TONE) will not be included when redialing.

PDF Eraser Free

Problem	Cause/solution
You cannot have a conversation using the headset.	● Make sure that 【**HEADSET**】 is pressed. ● Make sure that the headset is plugged into the headset jack properly (see “Connecting the optional headset to the unit” on page 53).
During a power failure, you cannot make or answer a call.	● Make sure that a battery has been installed properly (see “Battery installation” on page 12). ● The battery may have been discharged. In that case, replace the battery with a new one (see “Battery replacement” on page 12).
The intercom does not work.	● DSL Internet connection and KX-TS4100/KX-TS4200/ KX-TS4300 Intercom work at similar frequencies. Please contact Panasonic at 1-800-211-PANA (1-800-211-7262) for special wiring configurations.
You cannot page other extension.	● The unit is in use. Try again later.
You cannot answer the transferred call even if the display shows “**Transfer From xx**”.	● The transferred call was disconnected before you answered it.

Phonebook

Problem	Cause/solution
You cannot store a name and phone number in the phonebook.	● Do not pause for over 30 seconds while programming. ● Make sure that the unit is in standby mode.
The display returns to standby mode while viewing the phonebook.	● Do not pause for over 30 seconds while searching.

PDF Eraser Free

Caller ID

Problem	Cause/solution
The caller's information is not displayed.	● You have not subscribed to Caller ID service. Contact your telephone company to subscribe. ● If your unit is connected to any additional telephone equipment such as a Caller ID box or cordless telephone jack, disconnect the unit from the equipment and plug the unit directly into the wall jack. ● If your unit is connected to a telephone line with DSL service, we recommend connecting a noise filter between the unit and the telephone line jack (see "Connecting 2 two-line telephone jacks" on page 18, "Connecting four single-line telephone jacks" on page 19). Contact your DSL provider for details. ● The name display service may not be available in some areas. Contact your telephone company for details. ● Other telephone equipment may be interfering with this unit. Disconnect the other equipment and try again. ● The caller requested not to send caller information (see "Incoming Caller ID display" on page 43). ● If a call is being transferred to you, the caller information is not displayed. ● Generally, caller information is displayed from the 2nd ring.
The display returns to standby mode while viewing the caller list.	● Do not pause for over 30 seconds while searching.
When a 2nd call is received on the same line, the unit does not display the new caller's information.	● You have not subscribed to Caller ID and/or Call Waiting with Caller ID services. Please contact your telephone service provider for details and availability of this service in your area. ● If another call is received on the same line while a call is placed on hold, the caller information will not be displayed.
You cannot dial the phone number edited in the caller list.	● The phone number you dialed might have an incorrectly edited pattern (for example, the long distance "1" or the area code is missing). Edit the phone number with another pattern (see "Editing a caller's phone number before calling back" on page 45).

PDF Eraser Free

FCC and other information

This equipment complies with Part 68 of the FCC rules and the requirements adopted by the ACTA. On the bottom of this equipment is a label that contains, among other information, a product identifier in the format US:ACJ-----. If requested, this number must be provided to the telephone company.

- Registration No. .....(found on the bottom of the unit)
- Facility Interface Code.....02LS2
- Service Order Code.....9.0F
- Required Network Interface Jack RJ11C, RJ14C
- Ringer Equivalence No. (REN).....0.3B

A plug and jack used to connect this equipment to the premises wiring and telephone network must comply with the applicable FCC Part 68 rules and requirements adopted by the ACTA. A compliant telephone cord and modular plug is provided with the product. It is designed to be connected to a compatible modular jack that is also compliant.

The REN is used to determine the number of devices that may be connected to a telephone line. Excessive RENs on a telephone line may result in the devices not ringing in response to an incoming call. In most but not all areas, the sum of RENs should not exceed five (5.0). To be certain of the number of devices that may be connected to a line, as determined by the total RENs, contact the local telephone company. For products approved after July 23, 2001, the REN for the product is part of the product identifier that has the format US:AAAEQ##TXXXX. The digits represented by ## are the REN without a decimal point (e.g., 03 is a REN of 0.3).

If this equipment causes harm to the telephone network, the telephone company will notify you in advance that temporary discontinuance of service may be required. But if advance notice isn't practical, the telephone company will notify the customer as soon as possible. Also, you will be advised of your right to file a complaint with the FCC if you believe it is necessary.

The telephone company may make changes in its facilities, equipment, operations or procedures that could affect the operation of the equipment. If this happens the telephone company will provide advance notice in order for you to make necessary modifications to maintain uninterrupted service.

If trouble is experienced with this equipment, for repair or warranty information, please contact a Factory Servicenter or other Authorized Servicer. If the equipment is causing harm to the telephone network, the telephone company may request that you disconnect the equipment until the problem is resolved.

Connection to party line service is subject to state tariffs. Contact the state public utility commission, public service commission or corporation commission for information.

If your home has specially wired alarm equipment connected to the telephone line, ensure the installation of this equipment does not disable your alarm equipment. If you have questions about what will disable alarm equipment, consult your telephone company or a qualified installer.

PDF Eraser Free

This equipment is hearing aid compatible as defined by the FCC in 47 CFR Section 68.316.

WHEN PROGRAMMING EMERGENCY NUMBERS AND(OR) MAKING TEST CALLS TO EMERGENCY NUMBERS:
1) Remain on the line and briefly explain to the dispatcher the reason for the call.
2) Perform such activities in the off-peak hours, such as early morning or late evenings.

This device complies with Part 15 of the FCC Rules. Operation is subject to the following two conditions:
(1) This device may not cause harmful interference, and (2) this device must accept any interference received, including interference that may cause undesired operation.

CAUTION:
Any changes or modifications not expressly approved by the party responsible for compliance could void the user's authority to operate this device.

NOTE:
This equipment has been tested and found to comply with the limits for a Class B digital device, pursuant to Part 15 of the FCC Rules. These limits are designed to provide reasonable protection against harmful interference in a residential installation. This equipment generates, uses, and can radiate radio frequency energy and, if not installed and used in accordance with the instructions, may cause harmful interference to radio communications. However, there is no guarantee that interference will not occur in a particular installation. If this equipment does cause harmful interference to radio or television reception, which can be determined by turning the equipment off and on, the user is encouraged to try to correct the interference by one or more of the following measures:
– Reorient or relocate the receiving antenna.
– Increase the separation between the equipment and receiver.
– Connect the equipment into an outlet on a circuit different from that to which the receiver is connected.
– Consult the dealer or an experienced radio/TV technician for help.

PDF Eraser Free

Specifications

Operating environment	5 °C – 40 °C (41 °F – 104 °F)
Dimensions (without wall mounting adaptor)	Approx. height 105 mm x width 245 mm x depth 225 mm ($4^{1}/_{8}$ inches x $9^{21}/_{32}$ inches x $8^{7}/_{8}$ inches)
Mass (Weight) (without wall mounting adaptor)	Approx. 1,080 g (2.38 lb.)
Power consumption	Standby: Approx. 5 W (PQLV210Z) Maximum: Approx. 8 W (PQLV210Z)
Power supply	AC adaptor (120 V AC, 60 Hz)

Note:

- Design and specifications are subject to change without notice.
- The illustrations in these instructions may vary slightly from the actual product.

PDF Eraser Free

Customer services

Customer Services Directory

Obtain Product Information and Operating Assistance; locate your nearest Dealer or Servicenter; purchase Parts and Accessories; or make Customer Service and Literature requests by visiting our Web Site at:

http://www.panasonic.com/consumersupport

or, contact us via the web at:

http://www.panasonic.com/contactinfo

You may also contact us directly at: 1-800-211-PANA (1-800-211-7262), Monday-Friday 9 am-9 pm; Saturday-Sunday 10 am-7 pm, EST.

TTY users (hearing or speech impaired users) can call 1-877-833-8855.

Accessory Purchases

Purchase Parts, Accessories and Instruction Books online for all Panasonic Products by visiting our Web Site at:

http://www.pasc.panasonic.com

or, send your request by E-mail to:

npcparts@us.panasonic.com

You may also contact us directly at:
1-800-332-5368 (Phone) 1-800-237-9080 (Fax Only)
(Monday - Friday 9 am to 9 pm, EST.)
Panasonic Services Company
20421 84th Avenue South, Kent, WA 98032
(We Accept Visa, MasterCard, Discover Card, American Express, and Personal Checks)

TTY users (hearing or speech impaired users) can call 1-866-605-1277.

Service in Puerto Rico

Panasonic Puerto Rico, Inc.
San Gabriel Industrial Park, Ave. 65 de Infantería, Km. 9.5,
Carolina, Puerto Rico 00985
Phone (787)750-4300, Fax (787)768-2910

PDF Eraser Free

Warranty

PANASONIC CONSUMER ELECTRONICS COMPANY, DIVISION OF PANASONIC CORPORATION OF NORTH AMERICA
One Panasonic Way,
Secaucus, New Jersey 07094

PANASONIC PUERTO RICO, INC.
San Gabriel Industrial Park,
Ave. 65 de Infantería, Km. 9.5,
Carolina, Puerto Rico 00985

Panasonic Telephone Products Limited Warranty

Limited Warranty Coverage

If your product does not work properly because of a defect in materials or workmanship, Panasonic Consumer Electronics Company or Panasonic Puerto Rico, Inc. (collectively referred to as “the warrantor”) will, for the length of the period indicated on the chart below, which starts with the date of original purchase (“Limited Warranty period”), at its option either (a) repair your product with new or refurbished parts, or (b) replace it with a new or a refurbished product. The decision to repair or replace will be made by the warrantor.

Parts	Labor
One (1) Year	One (1) Year

During the “Labor” Limited Warranty period there will be no charge for labor. During the “Parts” Limited Warranty period, there will be no charge for parts. You must mail-in your product prepaid during the Limited Warranty period. This Limited Warranty excludes both parts and labor for batteries, antennas, and cosmetic parts (cabinet). This Limited Warranty only applies to products purchased and serviced in the United States or Puerto Rico. This Limited Warranty is extended only to the original purchaser and only covers products purchased as new.

Mail-In Service

For assistance in the continental U.S.A. in obtaining repairs please ship the product prepaid to:

Panasonic Services Company Customer Servicenter
4900 George McVay Drive Suite B Door #12 McAllen, TX 78503

For assistance in Puerto Rico call Panasonic Puerto Rico, Inc. (787)-750-4300 or fax (787)-768-2910.

When shipping the unit carefully pack, include all accessories, and send it prepaid, adequately insured and preferably in the original carton. Include a letter detailing the complaint and provide a day time phone number where you can be reached.

IF REPAIR IS NEEDED DURING THE LIMITED WARRANTY PERIOD THE PURCHASER WILL BE REQUIRED TO FURNISH A SALES RECEIPT/PROOF OF PURCHASE INDICATING DATE OF PURCHASE, AMOUNT PAID AND PLACE OF PURCHASE. CUSTOMER WILL BE CHARGED FOR THE REPAIR OF ANY UNIT RECEIVED WITHOUT SUCH PROOF OF PURCHASE.

PDF Eraser Free

Limited Warranty Limits And Exclusions

This Limited Warranty ONLY COVERS failures due to defects in materials or workmanship, and DOES NOT COVER normal wear and tear or cosmetic damage. The Limited Warranty ALSO DOES NOT COVER damages which occurred in shipment, or failures which are caused by products not supplied by the warrantor, or failures which result from accidents, misuse, abuse, neglect, bug infestation, mishandling, misapplication, alteration, faulty installation, set-up adjustments, misadjustment of consumer controls, improper maintenance, power line surge, lightning damage, modification, introduction of sand, humidity or liquids, or rental use of the product, or service by anyone other than a Factory Servicenter or other Authorized Servicer, or damage that is attributable to acts of God.

THERE ARE NO EXPRESS WARRANTIES EXCEPT AS LISTED UNDER "LIMITED WARRANTY COVERAGE". THE WARRANTOR IS NOT LIABLE FOR INCIDENTAL OR CONSEQUENTIAL DAMAGES RESULTING FROM THE USE OF THIS PRODUCT, OR ARISING OUT OF ANY BREACH OF THIS LIMITED WARRANTY. (As examples, this excludes damages for lost time, lost calls or messages, cost of having someone remove or re-install an installed unit if applicable, travel to and from the servicer. The items listed are not exclusive, but are for illustration only.) **ALL EXPRESS AND IMPLIED WARRANTIES, INCLUDING THE WARRANTY OF MERCHANTABILITY, ARE LIMITED TO THE PERIOD OF THE LIMITED WARRANTY.**

Some states do not allow the exclusion or limitation of incidental or consequential damages, or limitations on how long an implied warranty lasts, so the exclusions may not apply to you.

This Limited Warranty gives you specific legal rights and you may also have other rights which vary from state to state. If a problem with this product develops during or after the Limited Warranty period, you may contact your dealer or Servicenter. If the problem is not handled to your satisfaction, then write to the warrantor's Consumer Affairs Department at the addresses listed for the warrantor.

PARTS AND SERVICE, WHICH ARE NOT COVERED BY THIS LIMITED WARRANTY, ARE YOUR RESPONSIBILITY.

PDF Eraser Free

Index

A Answering calls: 26
Area codes: 43, 45
Auto mute: 39
B Battery
Installation: 12
Life: 12
Replacement: 12
C Call privacy: 28
Call Waiting: 29
Call Waiting Caller ID: 43
Caller ID service: 43
Caller list
Calling back: 44
Editing: 45
Erasing: 47
Storing: 46, 47
Viewing: 44
Chain dial: 34
Conference calls: 41
Connections
Communication device: 22
Handset and AC adaptor: 14
Noise filter: 18, 19
Standard telephone: 56
Telephone line cords: 15, 16, 17
D Date and time: 24
Dialing mode: 24
Display language: 23
Do Not Disturb (DND): 27
E Error messages: 57
Extension No.: 23
F Flash: 29
Flash time: 30
H Headset, optional: 53
Hold: 28
Hold reminder: 29
I Intercom: 38
L Line group: 20, 51
M Making calls: 25
Memory card: 11
Message waiting: 52
Missed calls: 43
Mute: 29
N Navigator key: 10
P Page: 39
Pause: 26
Phonebook: 31
Power failure: 14
Prime line: 50
Pulse service: 30
R Redial list: 25
Reset all: 51
Ringer on/off: 26
Ringer type: 27
Room monitor: 40
Rotary service: 30
S Speed dial preference: 35
Speed dialer: 35
SP-phone: 25
T Tone service: 30
Transferring calls: 40
Troubleshooting: 57
TTY: 5, 68
V Voice Mail service: 52
Volume
Handset: 25
Headset: 53
Ringer: 26
Speaker: 25
W Wall mounting: 54
Warranty: 65

PDF Eraser Free

If you need assistance with setup or operation

1 Visit our website: http://www.panasonic.com/phonehelp

2 Contact us via the web at: http://www.panasonic.com/contactinfo

3 Call us at: 1-800-211-PANA (1-800-211-7262)
TTY users (hearing or speech impaired users) can call 1-877-833-8855.

When you ship the product

- Carefully pack your unit, preferably in the original carton.
- Attach a letter, detailing the symptom, to the outside of the carton.
- Send the unit to Panasonic Services Company Customer Servicenter, prepaid and adequately insured.
- Do not send your unit to Panasonic Consumer Electronics Company listed below or to executive or regional sales offices. These locations do not repair consumer products.

Panasonic Consumer Electronics Company,
Division of Panasonic Corporation of North America
One Panasonic Way, Secaucus, New Jersey 07094

Panasonic Puerto Rico, Inc.
San Gabriel Industrial Park, Ave. 65 de Infantería, Km. 9.5,
Carolina, Puerto Rico 00985

Copyright:
This material is copyrighted by Panasonic Communications (Malaysia) Sdn. Bhd., and may be reproduced for internal use only. All other reproduction, in whole or in part, is prohibited without the written consent of Panasonic Communications (Malaysia) Sdn. Bhd.
© 2006 Panasonic Communications (Malaysia) Sdn. Bhd. All Rights Reserved.

TS4200

PQQX15540YA FM0706FS1086